AOG
AMERICAN OUTDOOR GRILL

PORTABLE OUTDOOR GAS GRILLS

24, 30, & 36 "L" Series

INSTALLATION AND OWNER'S MANUAL

INSTALLER: Leave these instructions with consumer.
CONSUMER: Retain for future reference.

IMPORTANT: READ THESE INSTRUCTIONS CAREFULLY BEFORE STARTING INSTALLATION OR USE.

WARNINGS AND SAFETY CODES

⚠ DANGER:

IF YOU SMELL GAS:

1. Shut off the gas to the appliance.
2. Extinguish any open flame.
3. Open lid.
4. If odor continues, keep away from the appliance and ***immediately*** call your gas supplier or the fire department.

ONLY TO BE USED OUTDOORS

CODE AND SUPPLY REQUIREMENTS: This grill must be installed in accordance with local codes and ordinances, or, in the absence of local codes, with the latest National Fuel Gas Code (ANSI Z223.1/NFPA 54), or Natural Gas and Propane Storage and Handling Installation Code (CSA-B149.1).

This appliance and its dedicated manual shutoff valve must be disconnected from the gas-supply piping system when testing the system at pressures in excess of ½ psig (3.5 kPa).

This appliance must be isolated from the gas-supply piping system by closing its dedicated manual shutoff valve during any pressure testing of the gas-supply system at pressures up to and including ½ psig (3.5 kPa).

Proper operation of your grill requires prompt and periodic maintenance. See the SERVICING AND CLEANING section for details.

⚠ WARNING:

1. Do not store or use gasoline or other flammable vapors and liquids in the vicinity of this or any other appliance.
2. An LP cylinder not connected for use shall not be stored in the vicinity of this or any other appliance.

⚠ WARNING:

Improper installation, adjustment, alteration, service, or maintenance can cause injury or property damage. For proper installation, refer to the installation instructions. For assistance or additional information, consult a qualified professional service technician, service agency, or the gas supplier.

This appliance is designed as an <u>attended appliance</u>. <u>DO NOT</u> leave this appliance burning when unattended.

All electrical outlets in the vicinity of the grill must be properly grounded in accordance with local codes, or, in the absence of local codes, with the National Electrical Code, ANSI/NFPA 70, or the Canadian Electrical Code, CSA C22.1, whichever is applicable.

Keep all electrical-supply cords and fuel-supply hoses away from any heated surface.

Cooking Grid U.S. Patent Nos. D857,453 D862,984

PFS® C US

Certified to: ANSI Z21.58 CSA 1.6

American Outdoor Grill • PO Box 4053 • La Puente, CA 91747

INSTALLATION INSTRUCTIONS ET MANUEL DU PROPRIÉTAIRE

GRIL EXTÉRIEUR DE GAZ DU PORTABLE

IMPORTANT: LISEZ CES INSTRUCTIONS SOIGNEUSEMENT AVANT DE COMMENCER L'INSTALLATION OU L'UTILISATION

SÛRETÉ ET CODES D'AVERTISSEMENT

⚠ DANGER:

SI VOUS SENTEZ LE GAZ :

1. Coupez le gaz à l'appareil.
2. Éteignez-vous n'importe quelle flamme nue.
3. Ouvrez le couvercle.
4. Si l'odeur continue, gardez loin de l'appareil et appelez immédiatement votre département de fournisseur ou de feu de gaz.

À UTILISER UNIQUEMENT À L'EXTÉRIEUR

CONDITIONS DE CODE ET D'APPROVISIONNEMENT: Ce gril doit être installé selon des codes et des ordonnances locaux, ou, en l'absence des codes locaux, avec l'un ou l'autre le plus défunt Code national de gaz de carburant (norme ANSI Z223.1/NFPA 54), et Stockage de gaz naturel et de propane et manipulation du code d'installation (CSA-B149.1).

Cet appareil et ses différents robinets d'isolement doivent être démontés du gaz-fournissent le système sifflant en examinant le système aux pressions au-dessus du ½ psig (kPa 3.5).

Cet appareil doit être isolé dans gaz-fournissent le système sifflant par fermeture que ses différents robinets d'isolement manuels pendant tous les essais sous pression du gaz-fournissent le système aux pressions jusques et y compris le ½ psig (kPa 3.5).

- Ce gril est pour ultilisation à l'extérieur seulement. Si l'appareil est entreposé à l'intérieur, enlever les bouteilles et les laisser à l'extérieur.
- Ne pas ranger le gril immédiatement aprés l'avoir utilisé. le laisser refroidir avant de le déplacer ou de la ranger. Le non respect de cette mesure de sécurité pourrait entraîner un incendie causant des dommages à la propriété, des blessures ou la mort.
- Ne pas utiliser cet appareil sous une surface combustible.
- Ne pas utiliser cet appareil sous un auvent. Le non respect de cette mesure de sécurité pourrait entraîner un incendie ou des blessures.
- Dégagement minimal entre les parois latérales et l'arriére de l'appareil et la construction combustible (45.7 cm à partir des parois latérales et 45.7cm à partir de l'arriére).
- Le régulareur de pression de gaz prévu avec cet appareil de cuisson à gaz pour l'extérieur doit être utilisé. Ce régulateur est réglé pour une pression de sortie de 5 pouces de colonne de l'eau pour le gaz naturel, et 10 pouces pour le propane.
- LE RÉGULATEUR INCLUS D'APPAREILS EST ÉVALUÉ POUR LE MAXIMUM DE 1/2 (LIVRES PAR POUCE CARRÉ). SI VOTRE OFFRE DE GAZ EST 1/2 PLUS GRAND QUE (LIVRES PAR POUCE CARRÉ), UN RÉGULATEUR ADDITIONNEL DOIT ÊTRE INSTALLÉ AVANT LE GRIL. VOIR LA SECTION DE CONDITIONS D'OFFRE DE GAZ POUR LA PRESSION APPROPRIÉE D'OFFRE DE GAZ.

⚠ AVERTISSEMENT:

1. Ne stockez pas ou n'employez pas l'essence ou d'autres vapeurs et liquides inflammables à proximité de ceci ou d'aucun autre appareil.
2. Un cylindre de propane non relié pour l'usage ne sera pas stocké à proximité de ceci ou d'aucun autre appareil.

⚠ AVERTISSEMENT:

L'installation inexacte, l'ajustement, le changement, le service, ou l'entretien peuvent causer des dommages ou des dégats matériels. Référez-vous à ce manuel. Pour de l'aide ou des renseignements supplémentaires, consultez un technicien professionnel qualifié de service, une agence de service ou le fournisseur de gaz.

- Ne couvrez jamais la surface entière de cuisine ou de gril de gauffreuses ou de casseroles. La surchauffe se produira et les brûleurs ne seront pas très performants quand la chaleur de combustion est emprisonnée au-dessous de la surface à cuire.
- Ne pulvérisez jamais l'eau sur une unité chaude de gaz, comme ceci peut endommager des composants de porcelaine ou de fer de fonte.
- Une fuite de GPL peut causer une incendie ou une explosion si enflammée entraînant des blessures corporelles graves ou la mort.
- Communiquez avec le fournisseur de GPL pour les réparations ou pour disposer de qules bouteille ou du GPL non utilisé.

Cet appareil est conçu comme un <u>appareil surveillé</u>. <u>NE laissez PAS</u> cet appareil brûler sans surveillance.

Toutes les sorties électriques à proximité du gril doivent être correctement fondues selon des codes locaux, ou en l'absence de local code, avec le code électrique national, ANSI/NFPA 70, ou le code électrique canadien, CSA C22.1, celui qui est applicable.

Maintenez tout électrique-fournissent des cordes et carburant-fournissent des tuyaux partis de n'importe quelle surface de chauffage.

Certifié à la norme: ANSI Z21.58 / CSA 1.6

Grille de cuisson Numéros de brevets américains:
D857,453 D862,984

INSTALLATEUR : Laissez ces instructions avec le consommateur.
CONSOMMATEUR : Maintenez pour la future référence.

TABLE OF CONTENTS

GETTING STARTED

WARNINGS AND SAFETY CODES 1
INSTALLATION, OPERATION, AND SAFETY INFORMATION 4
ELECTRICAL CONNECTIONS 4
GAS SAFETY INFORMATION 5
WARNING 5
WHEN USING PROPANE GAS 5
WHEN USING NATURAL GAS 5
INSTALLATION SAFETY GUIDELINES 5
OPERATING THE UNIT SAFELY AND CORRECTLY 5
SAFE USE & MAINTENANCE OF PROPANE GAS CYLINDERS 7
INSTALLATION REQUIREMENTS 8
OVERHEAD CONSTRUCTION AND EXHAUST HOOD REQUIREMENTS 8
REAR WALL CLEARANCES 9
SIDE WALL / CORNER WALL CLEARANCES (if applicable) 9
COMBUSTION AIR AND COOLING AIRFLOW 10
GAS-SUPPLY PLUMBING REQUIREMENTS 10
ELECTRICAL SAFETY 11
MODEL SPECIFICATIONS 12
PORTABLE GRILL WIRING DIAGRAM 12
AOG GRILL REPLACEMENT PARTS LIST 14

INSTALLATION

INSTALLATION 17
LOCATION PREPARATION 17
WHEELS AND CASTERS 17
CONNECT THE GAS SUPPLY 17
LEAK TEST 18
INSTALL THE COOKING GRIDS 18
INSTALL THE DRIP TRAY 18
INSTALL THE SIDEBURNER SHELF (IF EQUIPPED) 20
RIGID SHELF INSTALLATION 21

USE, CARE, & SERVICE

IDENTIFICATION OF GRILL CONTROLS 22
USING THE GRILL 23
LIGHTING (IGNITION) INSTRUCTIONS 25
ELECTRONIC LIGHTING 25
ELECTRONIC LIGHTING 25
MANUAL LIGHTING 25
SHUTTING OFF THE UNIT 25
OPTIONAL INFRARED BURNER OPERATION 26
ROTISSERIE INSTRUCTIONS (IF EQUIPPED) 27
SERVICING AND CLEANING 28
CLEANING YOUR GRILL 28
REPLACING HALOGEN BULBS 30
CONTROL PANEL REMOVAL 31
FUSE REPLACEMENT 32
MAIN BURNER REMOVAL 32
CONVERT GAS TYPE / CHECK BURNER ORIFICES 33
AIR SHUTTER ADJUSTMENT / BURNER FLAME INSPECTION 36
VALVE "LOW" SETTING ADJUSTMENT 38
TROUBLESHOOTING 39
WARRANTY 40

INSTALLATION, OPERATION, AND SAFETY INFORMATION

1. The outdoor appliance and surrounding area MUST remain clear of flammable substances such as gasoline, yard debris, wood, etc. Maintain a minimum horizontal clearance of 18" (in all directions) from combustible materials/items.
2. Do not block the 1" front air inlet along the bottom of the control panel. See the COMBUSTION AIR AND COOLING AIRFLOW section under INSTALLATION REQUIREMENTS for details.
3. **This unit must be installed so that the vent openings on the cabinet remain clear and free at all times. See the GAS SAFETY INFORMATION section.**
4. **When using propane gas: the propane cylinder, regulator, and rubber hose must be in a location not subject to temperatures above 125° F (51° C).**
5. The back burner cover, sideburner, or infrared burner cover (if equipped) must be removed before using the burner.
6. The flames on each burner burn evenly along the entire burner with a steady flame (mostly blue). If burner flames are not normal, check and clean the orifice and burner/venturi tubes for insects and insect nests. A clogged tube can lead to a fire beneath the unit. A proper flame pattern will ensure safe operation and optimal performance. Adjust the air shutter as needed (see AIR SHUTTER ADJUSTMENT section).
7. The in-line gas valve or gas cylinder valve must always be shut OFF when the unit is not in use.
8. The drip collector holes must be clear and unobstructed. Excessive grease deposits can result in a grease fire.

   If lining the interior firebox with aluminum foil (not recommended), DO NOT block the drip collector holes, air baffle(s), or any ventilation louvers as this will cause a grease fire and/or cause the unit to over heat.
9. Whenever reconnecting any wires, apply a small amount of dielectric grease to the male connector, then make the connection. This will ensure conductivity and prevent moisture from affecting the contact.
10. Wear gloves and use extreme caution whenever installing and handling this product and its accessories as certain components have sharp edges that can cause personal injury.
11. **Adults MUST be present when this gas appliance is operating. This appliance MUST NOT be left burning when unattended.**

IMPORTANT

IN THE EVENT OF A GREASE FIRE, IMMEDIATELY SHUT OFF THE MAIN GAS VALVE TO THE UNIT. KEEP THE LID OPEN AND ALLOW THE FIRE TO EXTINGUISH ITSELF. KEEP AT A SAFE DISTANCE. A THOROUGH INSPECTION BY A QUALIFIED PROFESSIONAL SERVICE TECHNICIAN SHOULD BE CONDUCTED BEFORE FUTURE USE OF YOUR UNIT. THE SERVICE TECHNICIAN WILL CHECK THE SYSTEM FOR GAS LEAKS AND WILL CHECK ALL ELECTRICAL WIRING FOR DAMAGE. ALL GAS LEAKS AND WIRING MUST BE REPAIRED PRIOR TO FUTURE USE.

WARNING: NEVER cover more than 75% of the cooking or grill surface with griddles or pans. Overheating will occur, and burners will not perform properly when combustion heat is trapped below the cooking surface.

The unit serial number tag can be found affixed to the grill body behind the control panel (on an aluminum tag) and on the underside of the drip tray handle (on a thermal label). It is recommended that the drip tray first be removed and cleaned / emptied of its contents, then turned over to view. The unit rating label is located inside of the control panel.

ELECTRICAL CONNECTIONS

A **120VAC (15 AMP minimum) GFCI GROUNDED 3-wire receptacle** (not included) is required within the vicinity of the unit to provide power to it. The GFCI receptacle must be a WEATHER-PROOF IN-USE COVERED RECEPTACLE.

- **Observe the National Electric Code and all local codes.**
- **Verify proper polarity of the receptacle.**
- **If an extension cord is used, ensure it is a 3-wire GROUNDED cord that is rated for the power of the equipment, and is approved for outdoor use with a W-A marking. DO NOT use 2-prong adapters.**
- **DO NOT TAMPER WITH THE EXTENSION CORD OR THE UNIT POWER-SUPPLY CORD.**

Important: ONLY REPLACE THE INTERIOR OVEN LIGHTS WITH 12V / 10 WATT HALOGEN BULB(S).

GAS SAFETY INFORMATION

WHEN OPERATING THIS GAS APPLIANCE, ALL INSTRUCTIONS AND WARNINGS MUST BE OBSERVED. FAILURE TO DO SO MAY RESULT IN A FIRE OR EXPLOSION CAUSING PROPERTY DAMAGE, BODILY INJURY, OR DEATH.

WARNING

This appliance MUST be installed and operated according to the information below.

FAILURE TO PROPERLY VENT THE GRILL CABINET MAY RESULT IN A FIRE OR EXPLOSION CAUSING PROPERTY DAMAGE, BODILY INJURY, OR DEATH.

A leaking gas connection or valve unintentionally left open will create a hazard.

WHEN USING PROPANE GAS

- **Propane gas** (also known as **L.P. gas**) is heavier than air and will accumulate or pool in an inadequately vented enclosure or recessed area.
- If a pool of **propane gas** is ignited, an explosion will occur. Adequate venting at the floor level of the cabinet eliminates this danger.
- DO NOT store a spare propane-gas cylinder in or near the unit.

WHEN USING NATURAL GAS

- **Natural gas** is lighter than air and will accumulate at the top of an inadequately vented enclosure.
- If an accumulation of **natural gas** is ignited, an explosion will occur. Adequate venting at the top of the cabinet eliminates this danger.

INSTALLATION SAFETY GUIDELINES

THIS UNIT MUST BE INSTALLED SO THAT THE VENT OPENINGS ON THE CABINET REMAIN CLEAR AND FREE AT ALL TIMES.

The gas cylinder, regulator, and rubber hose must be in a location not subject to temperatures above 125° F (51° C).

IF A PROPANE CYLINDER IS INSTALLED INSIDE OF THE CABINET, THE GUIDELINES FOUND IN THE **SAFE USE & MAINTENANCE OF PROPANE GAS CYLINDERS** SECTION MUST BE FOLLOWED.

OPERATING THE UNIT SAFELY AND CORRECTLY

Every time you use the unit, **make sure that:**

1. The area around the unit is clear and free from combustible materials, gasoline and flammable vapors/liquids.
2. There is no blockage of the airflow through the vent openings located on the cabinet.
3. The hose is inspected (if applicable). See SAFE USE & MAINTENANCE OF PROPANE-GAS CYLINDERS section.

DO NOT store any combustible materials, gasoline, and any other flammable vapors/liquids in the vicinity of the unit. Provide adequate clearance for servicing and operation.

UTILISATION SÛRE ET ENTRETIEN DES CYLINDRES DE GAZ DE PROPANE

IMPORTANT POUR VOTRE SÛRETÉ

LISEZ ET SUIVEZ TOUS LES AVERTISSEMENTS ÉQUIPÉS DE VOTRE CYLINDRE DE GAZ DE PROPANE.

En actionnant cet appareil avec un cylindre de gaz de propane ON DOIT observer ces instructions et avertissements.

LE MANQUE DE FAIRE AINSI PEUT AVOIR COMME CONSÉQUENCE UNE INCENDIE OU UNE EXPLOSION SÉRIEUSE.

CYLINDRE ET CONDITIONS ET CARACTÉRISTIQUES DE CONNECTEUR

a. Les bouteilles, les vannes et les tuyaux de propane doivent être entretenus et inspectés avant chaque utilisation. Ils doivent être remplacés en cas de dommages visibles. Si le tuyau est coupé ou présente des signes d'abrasion ou d'usure, il doit être remplacé avant utilisation (**voir e.**).

b. Cette unité, lorsqu'elle est utilisée avec une bouteille, doit être connectée à une bouteille standard de gaz propane de 5 gallons (20 lb) équipée d'un dispositif anti-débordement répertorié. L'appareil est obligatoire sur toutes les bouteilles vendues depuis le 1er octobre 1998 afin d'empêcher tout remplissage excessif.

c. Les dimensions du cylindre doivent être d'environ 12 "(30,5 cm) de diamètre et 18" (45,7 cm) de hauteur. Les bouteilles doivent être construites et marquées conformément aux spécifications du ministère des Transports (DOT) pour les bouteilles à gaz LP ou à la norme relative aux bouteilles, sphères et tubes pour le transport des marchandises dangereuses et à la Commission, CAN / CSA-B339, selon le cas.

d. La bouteille utilisée doit comporter un collier pour protéger le robinet de la bouteille. Le système d'alimentation de la bouteille doit être conçu pour le retrait de la vapeur. Voir figure suivante.

e. Le montage du régulateur de pression et le flexible (Fig. 6-1) fourni avec cet appareil au gaz en plein air (modèles au propane seulement) doit être utilisé. Assemblées d'origine et régulateur de pression et le tuyau de remplacement doivent être ceux spécifiés par le fabricant pour le raccordement d'un dispositif de cylindre de liaison identifiée comme de type I par le ANSI Z 21.58/CGA 1.6 (voir liste des pièces pour les informations de commande).

f. La valve de cylindre de gaz de propane doit être équipée d'un dispositif d'accouplement de raccordement de cylindre, décrit comme type I dans la norme définie dans le e. de paragraphe ci-dessus. Ce dispositif est généralement décrit comme coupleur de fil de point culminant.

g. Si la bouteille est livrée avec un bouchon anti-poussière, placez-le sur la sortie du robinet de la bouteille chaque fois que la bouteille n'est pas utilisée. Installez uniquement le type de capuchon anti-poussière sur la sortie du robinet de la bouteille qui est fourni avec le robinet de la bouteille. D'autres types de bouchons ou de bouchons peuvent entraîner des fuites de propane.

OPÉRATION DE COUPLEUR

Pour relier le regulator/hose à l'ajustage de précision de valve de cylindre de gaz de propane: Serrez l'écrou de main sur le régulateur au-dessus de l'ajustage de précision de fil de point culminant sur la valve de cylindre. Tournez l'écrou de main dans le sens des aiguilles d'une montre pour engager les fils et pour serrer jusqu'à ce que douillettement. L'utilisation des pinces ou de la clé ne devrait pas être nécessaire. Seulement le propane marqué par cylindres doit être employé.

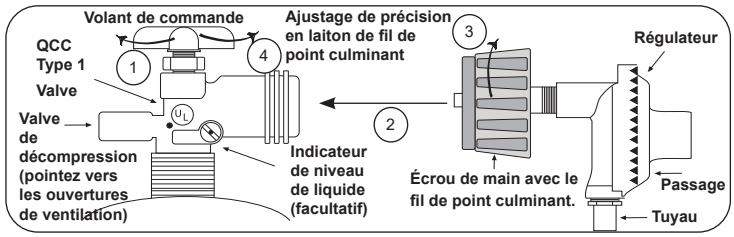

Fig. 6-1 Type coupleur de fil de point culminant d'I

Pour débrancher: Tournez l'écrou de main dans le sens contraire des aiguilles d'une montre jusqu'à isolé (fig. 6-1).

Important: Avant d'employer le unité, et ensuite chaque fois que le cylindre est enlevé et rattaché, examinez tous les raccordements pour déceler les fuites. Arrêtez les valves de unité et ouvrez la valve principale de cylindre, puis vérifiez les raccordements avec de l'eau savonneux. Réparez toutes les fuites avant d'allumer le unité.

ATTENTION: Tournez toujours la valve principale de cylindre de propane au loin après chaque utilisation, et avant de déplacer le unité et le cylindre, ou débrancher l'accouplement. Cette valve doit rester fermée et le cylindre a débranché alors que l'appareil n'est pas en service, quoique l'écoulement de gaz soit arrêté par un dispositif de sûreté quand le coupleur est débranché.

Inspectez soigneusement l'ensemble de tuyau chaque fois avant que le gaz soit allumé. Un tuyau fissuré ou effiloché doit être immédiatement remplacé.

Si l'appareil est stocké à l'intérieur, le cylindre doit être disconnected et a enlevé. Des cylindres Disconnected doivent être stockés dehors, hors de la portée des enfants, avec les prises de valve filetées étroitement installées, et ne doivent pas être stockés dans un bâtiment, le garage, ou n'importe quel autre secteur inclus.

POUR VOTRE SÛRETÉ

a. Ne stockez pas un cylindre de gaz disponible de propane dessous ou ne vous approchez pas de cet appareil.

b. Ne remplissez jamais cylindre au delà de 80 pour cent de plein.

c. SI L'INFORMATION DANS "A" ET "B" N'EST PAS SUIVIE EXACTEMENT, UN FEU CAUSANT LA MORT OU DES DOMMAGES SÉRIEUX PEUT SE PRODUIRE.

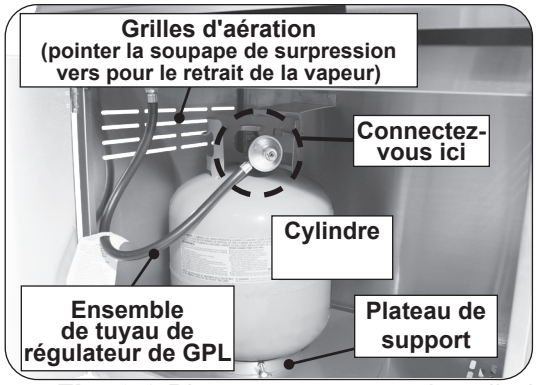

Fig. 6-2 Placer et connecter le cylindre

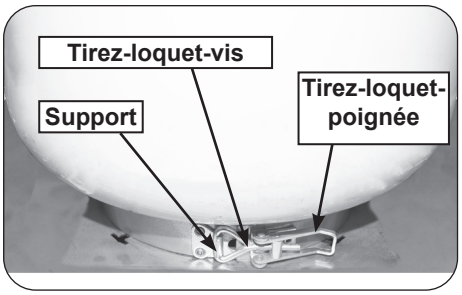

Fig. 6-3 Cylindre sécurisé:

Accrochez l'extrémité ronde de la vis du loquet de traction sur le support (qui se trouve sur le col du plateau). Ensuite, fermez la poignée du loquet de traction. Assurez-vous que le collier maintient solidement le cylindre en place. (Si nécessaire, la vis de verrouillage peut être ajustée pour serrer ou desserrer le collier.)

SAFE USE & MAINTENANCE OF PROPANE GAS CYLINDERS

IMPORTANT FOR YOUR SAFETY

READ AND FOLLOW ALL WARNINGS PROVIDED WITH THE PROPANE-GAS CYLINDER.

When operating this appliance with a propane-gas cylinder, these instructions and warnings **MUST** be observed.

FAILURE TO DO SO MAY RESULT IN A SERIOUS FIRE OR EXPLOSION.

CYLINDER/CONNECTOR REQUIREMENTS

a. Propane-gas cylinders, valves, and hoses must be maintained in good condition and inspected before each use of appliance. They must be replaced if there is any visible damage. If hose is cut or shows excessive abrasion or wear, it must be replaced before using appliance (see **e**.).

b. This unit, when used with a cylinder, should be connected to a standard 5-gallon (20 lb.) propane-gas cylinder equipped with a listed overfilling prevention device. The device has been required on all cylinders sold since October 1,1998, to prevent overfilling.

c. Cylinder dimensions should be approximately 12" (30.5 cm) in diameter and 18" (45.7 cm) high. Cylinders must be constructed and marked in accordance with the U.S. Department of Transportation (D.O.T.) *Specifications for LP-Gas Cylinders,* or the Standard for *Cylinders, Spheres, and Tubes for Transportation of Dangerous Goods and Commission,* CAN/CSA-B339, as applicable.

d. The cylinder used must include a collar to protect the cylinder valve. The cylinder supply system must be arranged for vapor withdrawal. See following figure(s).

e. The pressure regulator and hose assembly (Fig. 7-1) *supplied* with this outdoor gas appliance (L.P. models only) must be used. Original and replacement pressure regulator and hose assemblies must be those specified by the manufacturer for connection with a cylinder connecting device identified as Type I by the *ANSI Z 21.58/CGA 1.6* (see PARTS LIST for ordering information).

f. The propane-gas cylinder valve must be equipped with a cylinder connection device, described as Type I in the standard defined in paragraph **e**. above. This device is commonly described as an Acme thread coupler.

g. If the cylinder comes with a dust plug, place it on the cylinder valve outlet whenever the cylinder is not in use. Only install the type of dust cap on the cylinder valve outlet that is provided with the cylinder valve. Other types of caps or plugs may result in leakage of propane.

COUPLER OPERATION

To connect the regulator/hose assembly to the propane-gas cylinder valve fitting: Press the hand nut on the regulator over the Acme thread fitting on the cylinder valve. Turn the hand nut clockwise to engage the threads and tighten until snug. The use of pliers or a wrench should not be necessary. Only cylinders marked “propane” may be used.

To disconnect: Turn the hand nut counterclockwise until detached (Fig. 7-1).

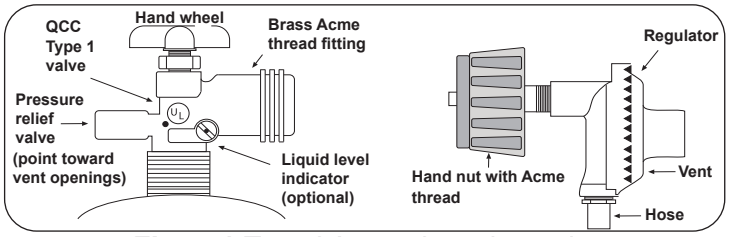

Fig. 7-1 Type I Acme thread coupler

Important: Before using the unit, and after each time the cylinder is removed and reattached, check the hose for wear (see **a**.) and check all connections for leaks. Turn off the unit valves and open the main cylinder valve, then check connections with soapy water. Repair any leaks before lighting the unit.

CAUTION: Always turn the propane cylinder main valve off after each use, and before moving the unit and cylinder or disconnecting the coupling. This valve must remain closed and the cylinder disconnected while the appliance is not in use, even though the gas flow is stopped by a safety feature when the coupler is disconnected.

Carefully inspect the hose assembly each time before the gas is turned on. A cracked or frayed hose must be replaced immediately.

If the appliance is stored indoors, the cylinder must be disconnected and removed. Disconnected cylinders must be stored outdoors, out of the reach of children, with threaded valve plugs tightly installed, and must not be stored in a building, garage, or any other enclosed area.

FOR YOUR SAFETY

a. DO NOT store a spare propane-gas cylinder under or near this appliance.

b. NEVER fill the cylinder beyond 80-percent full.

c. IF THE INFORMATION IN **a.** AND **b.** IS NOT FOLLOWED EXACTLY, A FIRE CAUSING DEATH OR SERIOUS INJURY MAY OCCUR.

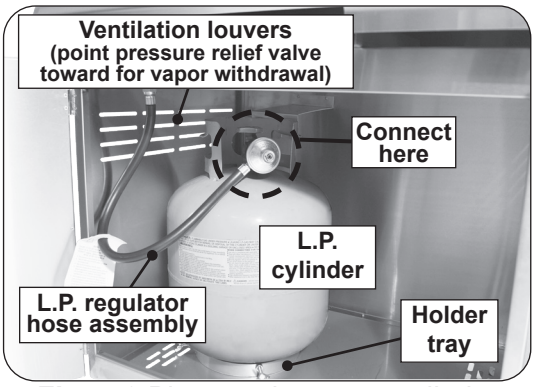

Fig. 7-2 Place and connect cylinder

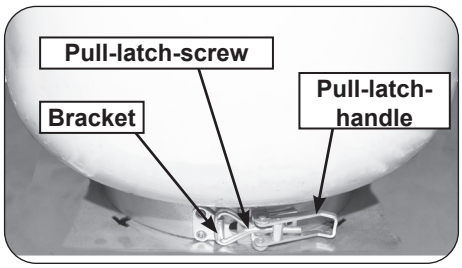

Fig. 7-3 Secure cylinder:

Hook the round end of the pull-latch-screw over the bracket (found on collar of tray).Then snap the pull-latch-handle closed. Ensure the collar is securely holding the cylinder in place. (If needed the pull-latch-screw can be adjusted to tighten or loosen the collar.)

Installation must be performed by a qualified professional service technician.

This unit is designed for outdoor use only. **DO NOT** use this unit inside a building, garage, or enclosed area. **DO NOT** use this unit in or on a recreational vehicle or boat.

OVERHEAD CONSTRUCTION AND EXHAUST HOOD REQUIREMENTS

A minimum 5 foot clearance is required between the cooking surface and the overhead construction.

When installed under combustible overhead construction, the area above the cooking surface of the unit **must** be covered with an exhaust hood. The exhaust hood provides the protection for the combustible overhead construction. See exhaust hood information below and Fig. 8-1.

Important: **DO NOT** use this appliance under **unprotected** combustible overhead construction.

When installed under overhead non-combustible construction, an exhaust hood is highly recommended; see exhaust hood information below and Fig. 8-1.

Exhaust Hood

When using an exhaust hood, the area above the cooking surface of the grill must be covered with a hood larger than the cooking area of the grill, and with a minimum of 1200 CFM (cubic feet per minute) rated exhaust fan for proper outdoor application.

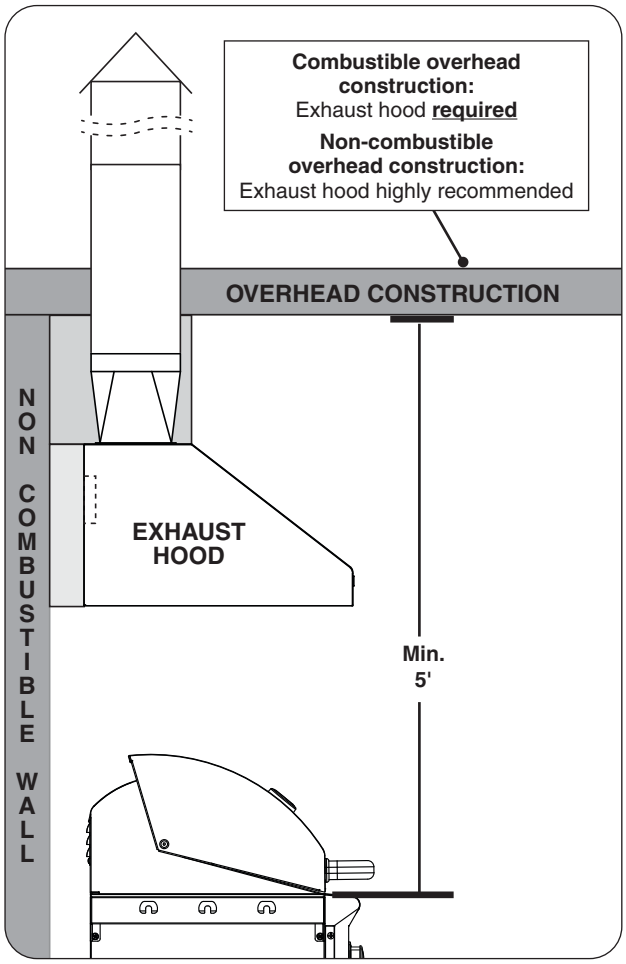

Fig. 8-1 Overhead requirements

REAR WALL CLEARANCES

For the minimum clearances between the unit and rear walls, your setup must fall within one (or more) of the following:

A. Clearance between unit and strictly non-combustible rear wall

(*i.e. brick wall, see Fig. 9-1*)

- The unit must have a minimum clearance of 4" from the non-combustible rear wall.

  (To allow for proper ventilation and prevent dangerous overheating.)

B. Clearance between unit and a protected combustible rear wall

(i.e. a non-combustible wall in front of a combustible wall to serve as a barrier. This can be accomplished by brick, or a metal stud finished with non-combustible substrate, see Fig. 9-2)

- The unit must have a minimum clearance of 14" from the protected combustible rear wall.

  (The 4" non-combustible material plus an additional 10" clearance between the unit and protected rear wall.)

C. Clearance between unit and combustible rear wall

- The unit must have a minimum clearance of 18" from the combustible rear wall (see Fig. 9-3).

SIDE WALL / CORNER WALL CLEARANCES (if applicable)

The unit must have a minimum clearance of 24" from any side walls (to account for variables in airflow that could affect performance). See Fig. 9-4.

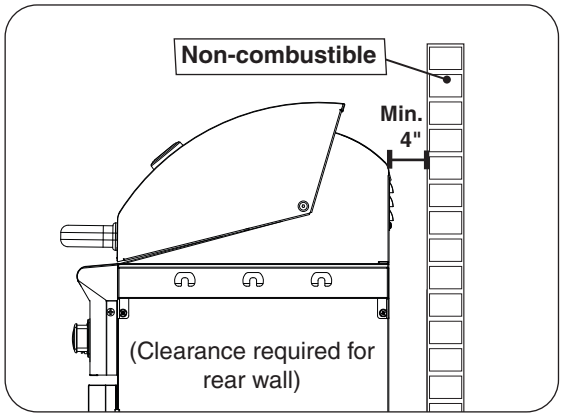

Fig. 9-1 Clearance **'A'** Diagram

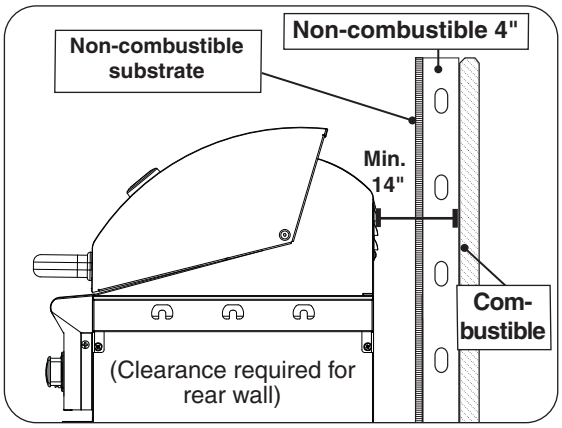

Fig. 9-2 Clearance **'B'** Diagram

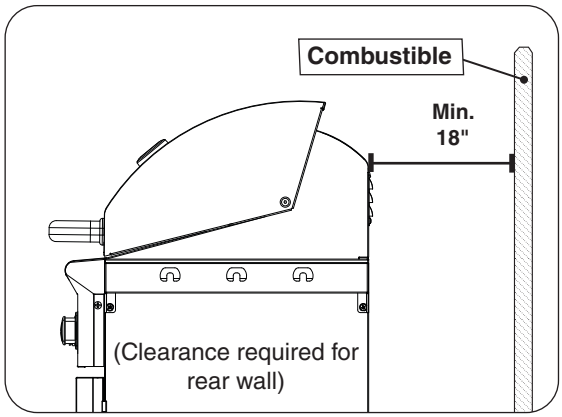

Fig. 9-3 Clearance **'C'** Diagram

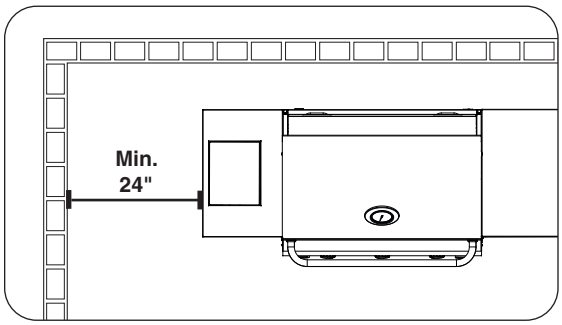

Fig. 9-4 Side/corner wall clearance

The control panel MUST remain removable for servicing (see CONTROL PANEL REMOVAL section).

COMBUSTION AIR AND COOLING AIRFLOW

Proper airflow (front-to-back, Fig. 10-1) MUST be maintained for the unit to perform as it was designed. If airflow is blocked, overheating and poor combustion will result. Do not block the 1" front air inlet along the bottom of the control panel.

CAUTION: Wind blowing into or across the rear oven lid vent (Fig. 10-3) can cause poor performance and/or dangerous overheating. Orient the grill so that the prevailing wind blows toward the front of the grill (Fig. 10-2). **A wind deflector is available for purchase to assist in proper airflow during windy conditions.** See Table 1 for model numbers. Follow the instructions included with the wind deflector for installation.

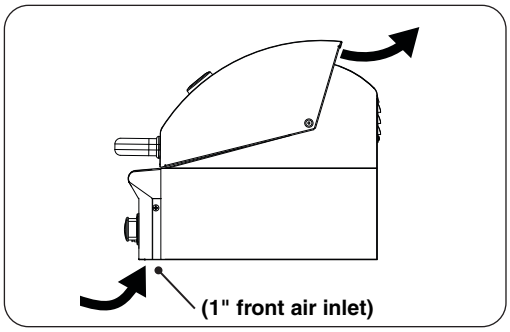

Fig. 10-1 Airflow diagram

Fig. 10-2 Airflow direction - CORRECT

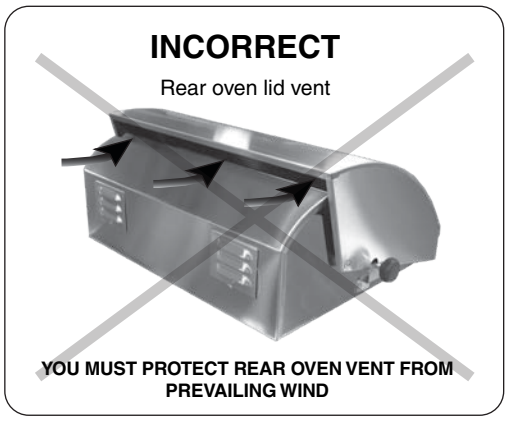

Fig. 10-3 Airflow direction - INCORRECT

GAS-SUPPLY PLUMBING REQUIREMENTS

The gas supply is to be brought up near/behind the unit. Your individual installation may vary. **Observe the National Fuel Gas Code and all local codes. Leak test at all connections.**

The gas supply must be sized to provide minimum inlet pressure at the maximum flow rate (BTU/hr). Undue pressure loss will occur if the pipe is too small, or the run is too long. Gas supply pipe must be ½" minimum interior diameter. If the gas line is longer than 20', a larger diameter line may be necessary. Refer to the NFPA 54 guidelines for further details.

Any rigid pipe gas line MUST stop outside of and near the unit. It CANNOT be routed inside the cabinet of the unit. For natural gas models, a quick disconnect hose is included and pre-installed to the valve manifold, and routes out of the cabinet. For household propane, an appropriate, C.S.A. approved, flexible hose or similar MUST be purchased to route from the unit valve manifold out to the gas line. The R.H.P. quick disconnect hose is recommended, and is discussed and illustrated in this manual (see INSTALLATION and PARTS LIST sections). Contact your dealer for ordering information. (If your household propane setup varies from what is shown, **observe the National Fuel Gas Code and all local codes.**)

Use a pipe joint compound resistant to all gasses on all NPT pipe fittings. Make sure to tighten every fitting securely. **Do not use pipe joint compound to connect flare fittings.**

Important: **A shut-off valve (not included) in the gas supply line is required.** It provides for safety when the unit is not in use and for convenient maintenance and repair. It must be installed within 6 feet of the unit and must be easily accessible. Use a pipe joint compound resistant to all gasses on all NPT pipe fittings **except flare fittings**.

GAS SUPPLY AND MANIFOLD PRESSURES:

For **natural gas** - normal 7" water column (w.c.), minimum 5", maximum 10 $^1/_2$". For **propane gas** - normal 11" w.c., minimum 10", maximum 13".

Note: An additional regulator may be needed to meet these requirements.

ELECTRICAL SAFETY

- To protect against electric shock, do not immerse cord or plugs in water or other liquid.
- Unplug from the outlet when not in use and before cleaning. Allow to cool before putting on or taking off parts.
- Do not operate any outdoor cooking gas appliance with a damaged cord, plug, or after the appliance malfunctions or has been damaged in any manner. Contact the manufacturer for repair.
- Do not let the cord hang over the edge of a table or touch hot surfaces.
- Do not use an outdoor cooking gas appliance for purposes other than intended.
- When connecting, first connect plug to the outdoor cooking gas appliance then plug appliance into the outlet.
- **Use only a properly wired and inspected 120VAC (15 AMP minimum) Ground Fault Circuit Interrupter (GFCI) GROUNDED 3-wire receptacle with this outdoor cooking gas appliance.**
- The GFCI receptacle must be a WEATHER-PROOF IN-USE COVERED RECEPTACLE.
- Never remove the grounding plug or use with an adapter of 2 prongs.
- Use only extension cords with a 3 prong grounding plug, rated for the power of the equipment, and approved for outdoor use with a W-A marking.
- **The provisions of the National Electric Code as well as any local codes must be observed when installing the product.**

		24"	30"	36"
Main burner	Quantity	2	3	3
	N/P orifice drill size	1.82mm / 1.16mm	#50 / 1.16mm	#49 / #56
	N/P air shutter opening †	1/4" / 1/4"	1/4" / 1/4"	1/4" / 1/4"
Backburner *	N/P orifice drill size	#53 / #64	#52 / #62	#52 / #62
Sideburner *	N/P orifice drill size	#53 / #63	#53 / #63	#53 / #63
	N/P air shutter opening †	1/4" / 1/4"	1/4" / 1/4"	1/4" / 1/4"
Infrared searing burner *	N/P orifice drill size	1.82mm / 1.16mm	#50 / 1.16mm	#49 / #56
Wind deflector model # (not included)		24-B-24	30-B-24A	36-B-24
Input electrical requirement		**120VAC / 15 AMP minimum / 60 Hz / GFCI outlet**		
Appliance rating		12VAC / 60 Watts		
Interior oven lights rating		**12V / 10 watt** halogen bulb		
Power supply fuse model # / fuse type		24-B-57 / T6.3AL (250V)		

* If equipped

† These are air shutter factory settings. These settings may require adjustment due to gas conversion, altitude, or other local conditions. See AIR SHUTTER ADJUSTMENT / BURNER FLAME INSPECTION section.

Table 1 - Product Specifications

PORTABLE GRILL WIRING DIAGRAM ▲

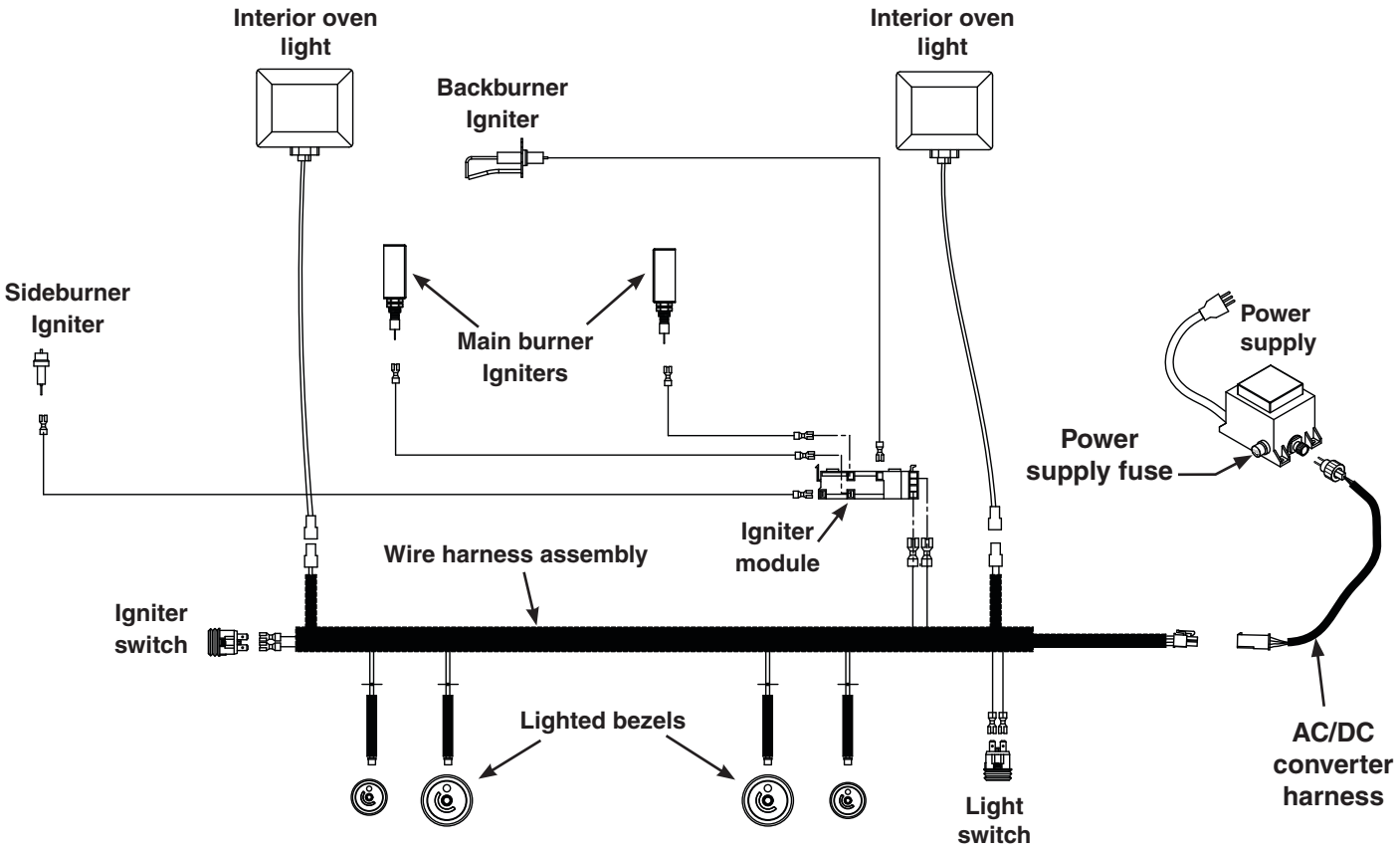

▲ **24" model shown. Model wire diagrams may vary.**

Note: In addition, a wire diagram specific to your unit can be found affixed to the inside of the control panel.

Grill model	HARDWARE KIT OPTIONS			ORIFICE KIT
	• 10ft. quick disconnect hose • convertible regulator • fittings	OR	• Convertible regulator • fittings	• Main burner / I.R. burner orifices • Backburner orifices • Sideburner orifices • Conversion label
24"	CK-41-NAT		CK-42-NAT	24-B-51
30"	CK-41-NAT		CK-42-NAT	30-B-51A
36"	CK- 41-NAT		CK-42-NAT	36-B-51
A hardware kit and orifice kit must be purchased when converting. Call your dealer for ordering information.				

Table 2 - Propane To Natural Gas Conversion Kits

Model	Height			Width		Depth	
	Floor to top (with oven)		Floor to top of shelf **(C)**	Left to right		Front to back	
	Open **(A)**	Closed **(B)**		Cart base **(D)**	Shelf to shelf **(E)**	Cart base **(F)**	Maximum outer **(G)**
24"	59"	48 1/2"	37"	25"	50"	22 1/4"	24 3/4"
30"	59"	48 1/2"	37"	31"	56"	22 1/4"	24 3/4"
36"	59"	48 1/2"	37"	37 1/4"	62 1/4"	22 1/4"	24 3/4"

Table 3 - Grill Dimensions

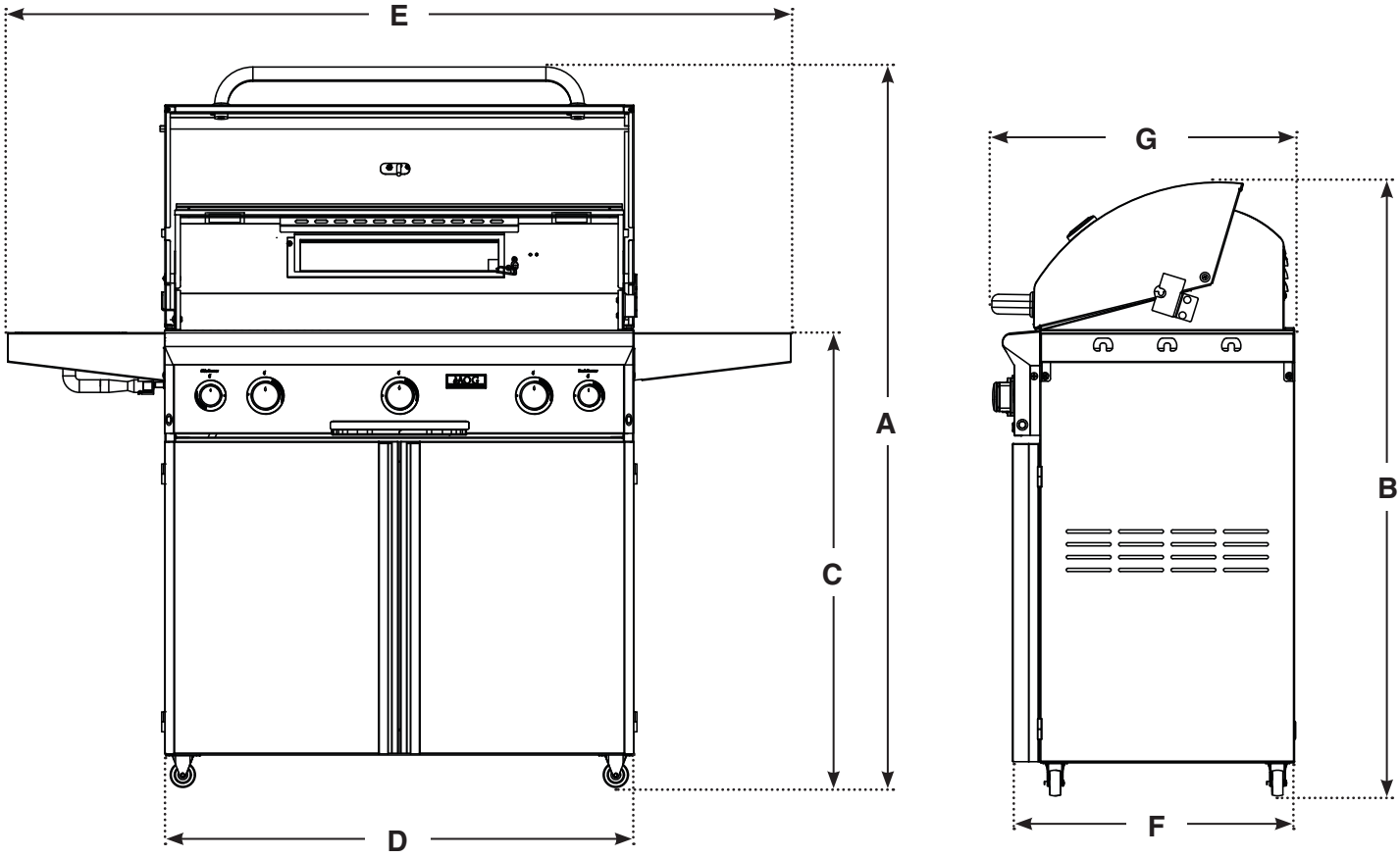

Fig. 13-1

IMPORTANT

This AOG oven and backburner (if equipped) are fully pre-assembled and tested at the factory.

DO NOT attempt to remove the oven and backburner from the barbecue prior to or during installation or damage to the connecting gas line and igniter wiring may occur.

The plastic straps that secure the oven to the barbecue unit must be removed and discarded prior to lighting.

Replacement parts can be ordered from your local AOG dealer.

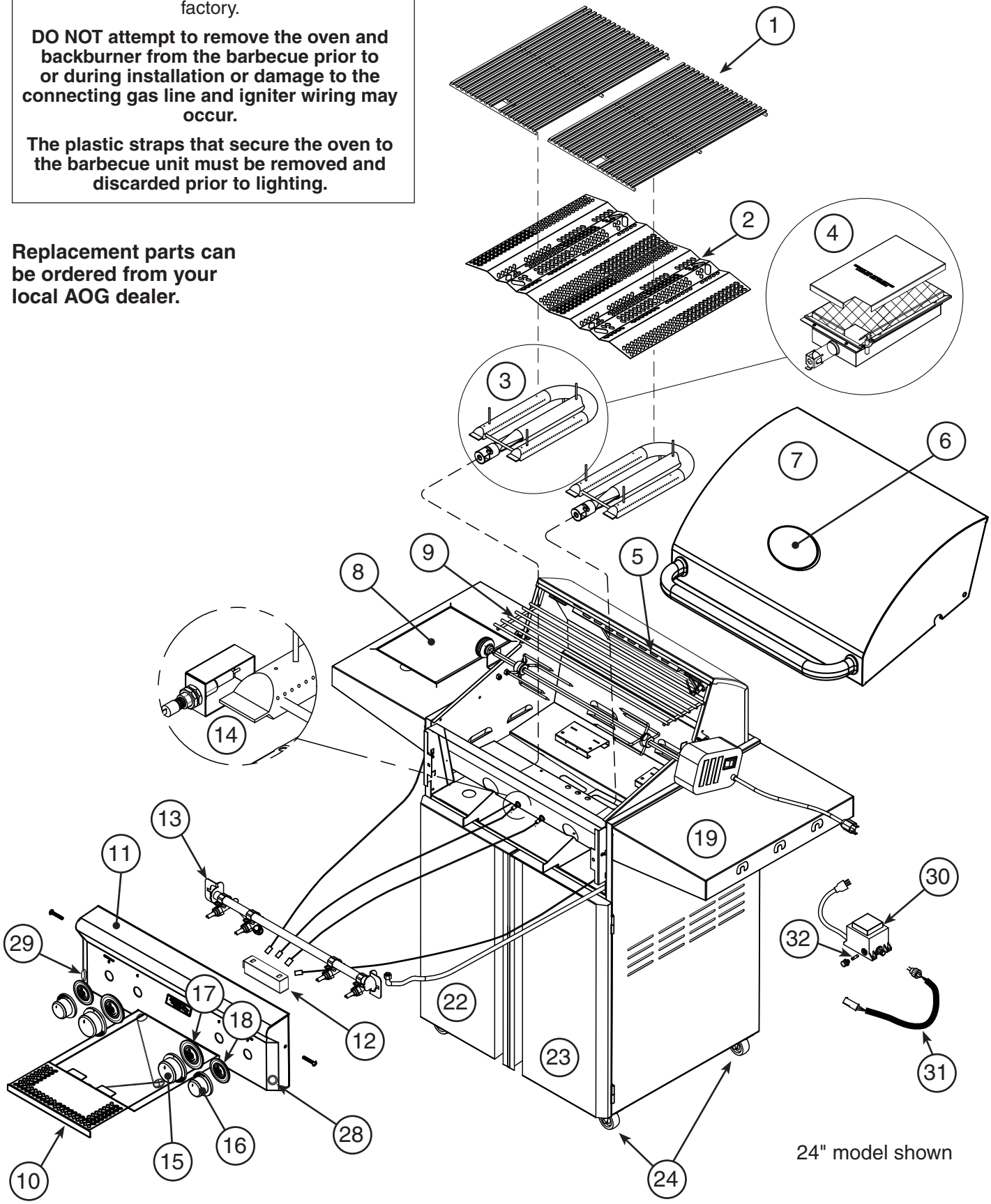

AOG GRILL REPLACEMENT PARTS LIST (Cont.)

Item	Description	24" Part No.	24" Qty.	30" Part No.	30" Qty.	36" Part No.	36" Qty.
1.	Stainless cooking grid (set of 2 or 3)	24-B-11A	1	30-B-11A	1	36-B-11A	1
2.	Vaporizer panel (set of 2 or 3)	24-B-05-2	1	30-B-05-3	1	36-B-05-3	1
3.	Main burner	24-B-06	2	24-B-06	3	24-B-06	3
4.	Infrared burner *	IRB-18	1	IRB-18	1	IRB-18	1
5.	Backburner *	24-B-17A	1	30-B-17A	1	30-B-17A	1
6.	Oven hood thermometer	23305	1	23305	1	23305	1
7.	Oven lid	24-B-25A	1	30-B-25A	1	36-B-25A	1
8.	Single sideburner shelf *	24-C-02	1	24-C-02	1	24-C-02	1
9.	Warming rack	24-B-02A	1	30-B-02A	1	36-B-02A	1
10.	Drip tray with match holder	3085	1	3085	1	3085	1
11.	Control panel w/ backburner, w/ sideburner	24-C-26L	1	30-C-26L	1	36-C-26L	1
or	Control panel w/o backburner, w/o sideburner †	24-C-27L	1	30-C-27L	1	36-C-27L	1
12.	Igniter module w/ backburner, w/ sideburner	3199-44	1	3199-46	1	3199-46	1
or	Igniter module w/o backburner, w/o sideburner †	24-B-49	1	3199-44	1	3199-44	1
13.	Valve manifold w/ backburner, w/ sideburner (nat. gas)	24-C-08	1	30-C-08	1	36-C-08	1
or	Valve manifold w/ backburner, w/ sideburner (L.P. gas)	24-C-08P	1	30-C-08P	1	36-C-08P	1
or	Valve manifold w/o backburner, w/o sideburner (nat. gas) †	24-C-34	1	30-C-34	1	36-C-34	1
or	Valve manifold w/o backburner, w/o sideburner (L.P. gas) †	24-C-34P	1	30-C-34P	1	36-C-34P	1
14.	Main burner electrode / igniter assembly	24-B-04	2	24-B-04	3	24-B-04	3
15.	Large knob	24-B-37L	2	24-B-37L	3	24-B-37L	3
16.	Small knob *	24-B-38L	2	24-B-38L	2	24-B-38L	2
17.	LED disk (large)	24-B-55	2	24-B-55	3	24-B-55	3
18.	LED disk (small) *	24-B-54	2	24-B-54	2	24-B-54	2
19.	Rigid shelf	24-C-01	1‡	24-C-01	1‡	24-C-01	1‡
20.	Convertible regulator (nat. models only) †	PR-4	1	PR-4	1	PR-4	1
21.	Propane regulator w/ hose (propane models only) †	5110-07	1	5110-07	1	5110-07	1
or	Quick disconnect hose (included with nat. models only) †	5110-03	1	5110-03	1	5110-03	1
22.	Door (left)	24-C-53L	1	30-C-53L	1	36-C-53L	1
23.	Door (right)	24-C-53R	1	30-C-53R	1	36-C-53R	1
24.	Caster kit (set of 4)	24-C-35	1	24-C-35	1	24-C-35	1
25.	**12V / 10** watt halogen light bulb †	24187-15	2	24187-15	2	24187-15	2
26.	Light lens †	24187-26	2	24187-26	2	24187-26	2
27.	Lamp assembly †	24187-28	2	24187-28	2	24187-28	2
28.	Light switch	24-B-45	1	24-B-45	1	24-B-45	1
29.	Igniter switch	24-B-46	1	24-B-46	1	24-B-46	1
30.	Power supply	24187-64	1	24487-64	1	24187-64	1
31.	AC/DC converter harness	24-B-56	1	24-B-56	1	24-B-56	1
32.	Power supply fuse	24-B-57	1	24-B-57	1	24-B-57	1
33.	Wire harness assembly †	24-B-48A	1	30-B-48A	1	36-B-48A	1

* If equipped
† Not shown
‡ If not equipped with sideburner; two rigid shelves are supplied.

ROTISSERIE KIT (if equipped)

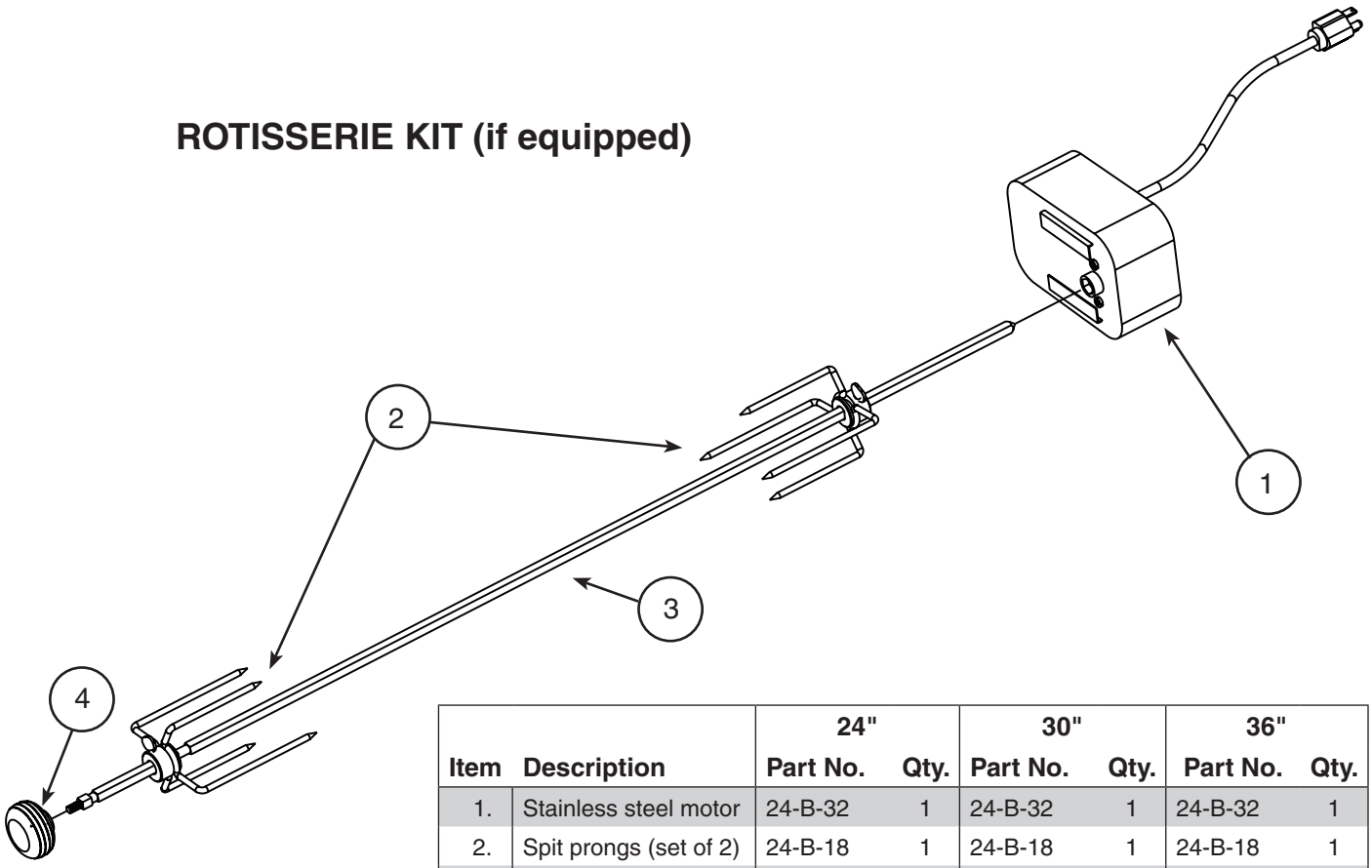

Item	Description	24" Part No.	24" Qty.	30" Part No.	30" Qty.	36" Part No.	36" Qty.
1.	Stainless steel motor	24-B-32	1	24-B-32	1	24-B-32	1
2.	Spit prongs (set of 2)	24-B-18	1	24-B-18	1	24-B-18	1
3.	Spit rod $^5/_8$" hex	24-B-33	1	30-B-33	1	36-B-33	1
4.	Handle knob	24-B-09	1	24-B-09	1	24-B-09	1

LOCATION PREPARATION

Prepare a flat, level surface capable of supporting the weight of the portable grill and convenient to the gas supply if connecting to a gas line.

WHEELS AND CASTERS

To lock a caster press down on the left lever until it stops and the caster will not turn. To unlock, press down on the right lever.

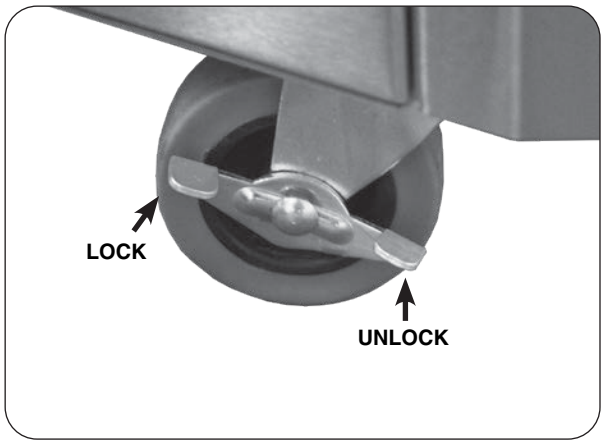

Fig. 17-1 Wheels and casters

CONNECT THE GAS SUPPLY

To Connect To Propane Cylinder:

Read the safety warnings and follow the instructions in the section SAFE USE AND MAINTENANCE OF PROPANE GAS CYLINDERS.

To Connect To Natural Or Household Propane Gas Supply:

- Before connecting the gas supply to your appliance, pressures MUST be tested and MUST NOT exceed 10.5" w.c. for Nat. gas and 13" w.c. for L.P. gas. An additional regulator may be required.
- Refer to the GAS SUPPLY PLUMBING REQUIREMENTS section for all details on the gas supply and its setup.
- For natural gas models, a quick disconnect hose is included and pre-installed to the unit valve manifold. For household propane, an appropriate, C.S.A. approved, flexible hose or similar MUST be purchased to route from the unit valve manifold out to the gas line. The R.H.P. quick disconnect hose is recommended, and is discussed and illustrated here. See PARTS LIST and contact your dealer for ordering information. (If your setup varies from what is shown here, **observe the National Fuel Gas Code and all local codes.**)

1. **Turn OFF gas supply at the source.**
2. **Household propane only:** A regulator hose assembly designed for L.P. cylinders comes pre-installed to the unit valve manifold. First remove this assembly from the flare adapter (at end of manifold), and then install a quick disconnect hose or similar (purchased separately) to the adapter. (An R.H.P. quick disconnect hose is recommended - see third bullet above.) Use a pipe joint compound resistant to all gasses on all NPT pipe fittings **except flare fittings**. Reference Fig. 17-2. Then proceed to step 3.
3. Route the quick disconnect hose (or similar) out of the hole in the rear bottom right of the cabinet, and to the gas supply (see Fig. 17-2).

Note: For quick disconnect hoses, the quick disconnect female socket will first need to be detached to allow the hose to feed through the hole.

4. A shut-off valve is required within 6 feet of the unit and must be easily accessible.

   Connect the quick disconnect female socket to the shut-off valve OR gas supply (NPT) using a pipe joint compound resistant to all gasses (see Fig. 17-3). Tighten securely. Re-attach the hose to the disconnect female socket.

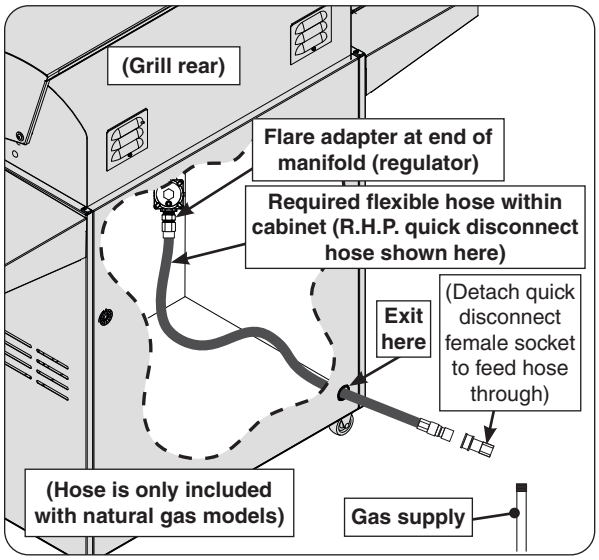

Fig. 17-2 Connecting to a gas line

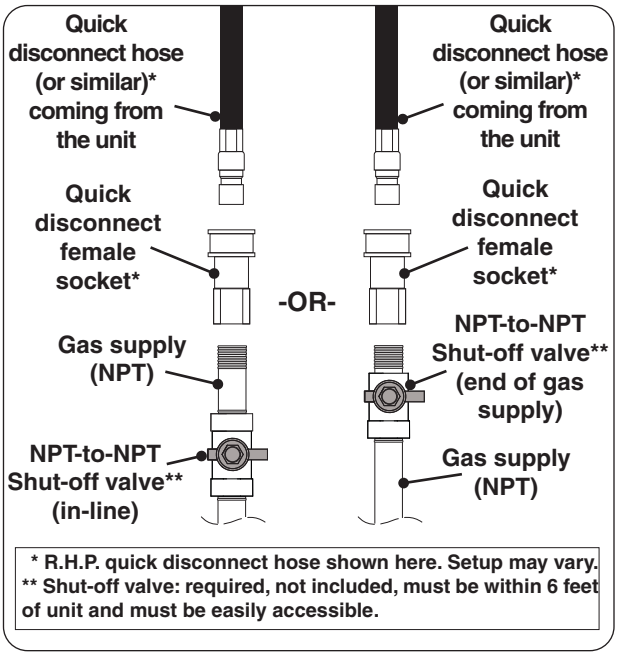

Fig. 17-3 Connecting to a gas line

LEAK TEST

Turn all burner valves to the **OFF** position. Turn on the gas supply, and test at all connections for leaks using a soapy water solution. If bubbles appear, a leak is present. Turn off the gas and tighten at all connections. Repeat until no leaks are present. If a leak persists, turn off the gas supply and contact the local gas company or dealer. **NEVER USE A FLAME TO CHECK FOR LEAKS.**

Once the leak test is complete, turn off the gas supply and proceed.

INSTALL THE VAPORIZER PANELS

Place the vaporizer panels directly onto the studs on the burners. See Fig. 18-1. The panels allow heat from the burners to be evenly distributed throughout the cooking area. The panels are stainless steel and will heat and cool quickly, making your barbecue very responsive to the changes you specify in grill temperature. They are rust resistant and may be cleaned with standard oven cleaners. Some discoloring will be seen with use. This is normal for stainless steel and does not affect the function.

INSTALL THE COOKING GRIDS

Carefully place each cooking grid onto the front and rear grid rests of the grill. See Fig. 18-2.

INSTALL THE DRIP TRAY

Fully insert the drip tray into the bottom front of the control panel. See Fig. 18-3.

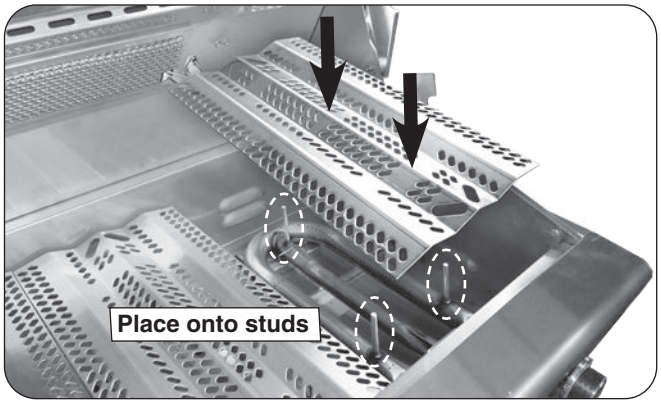

Fig. 18-1 Install vaporizer panels

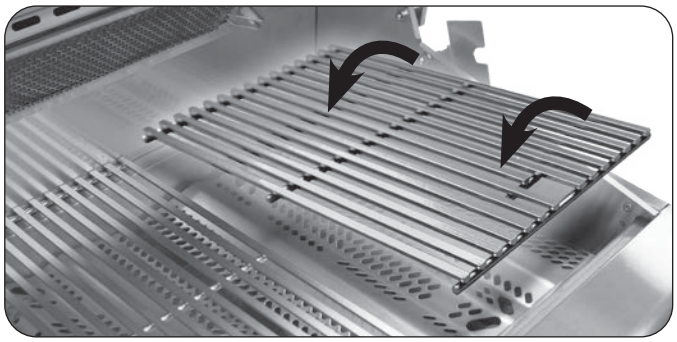

Fig. 18-2 Install cooking grids

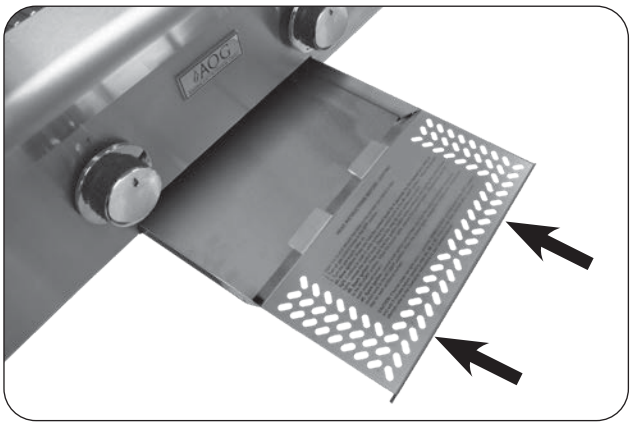

Fig. 18-3 Install drip tray

INSTALL THE WARMING RACK

The warming rack (Fig. 19-1) is packed separately. To install the warming rack, carefully insert the rack hangers into the two holes in the back of the inner oven hood, then lower the front of the rack to a level position.

Note: Removing the warming rack before using the rotisserie will leave more clearance for the meat being cooked (if applicable).

CONNECT THE POWER SUPPLY TO LINE POWER

Connect the cord coming from the rear of the unit to a **120VAC (15 AMP minimum) GFCI GROUNDED 3-wire receptacle.** The GFCI receptacle must be a WEATHER-PROOF IN-USE COVERED RECEPTACLE.

WARNING: Electrical Grounding Instructions - This appliance is equipped with a three-pronged (grounding) plug for your protection against shock hazard and should be plugged directly into a properly grounded three-prong receptacle. Do not cut or remove the grounding prong from this plug.

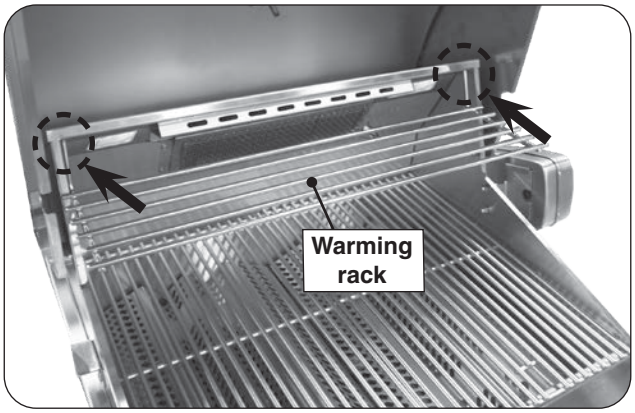

Fig. 19-1 Install warming rack

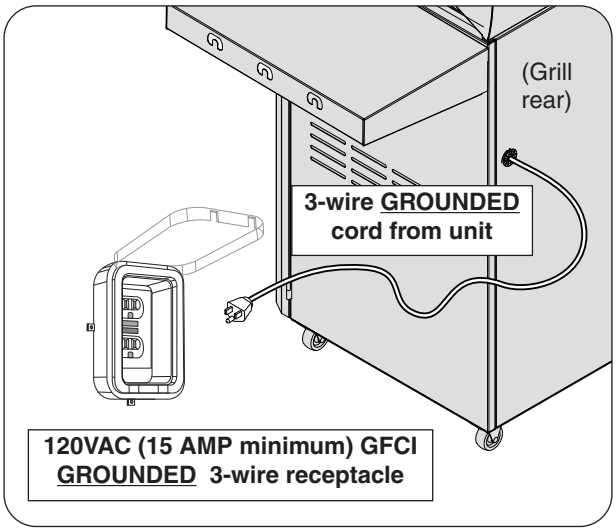

Fig. 19-2 Electrical setup detail

INSTALL THE SIDEBURNER SHELF (IF EQUIPPED)

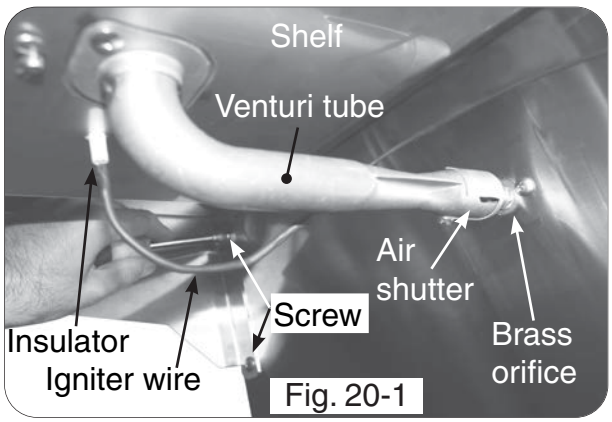

Air shutter orifice placement - under shelf

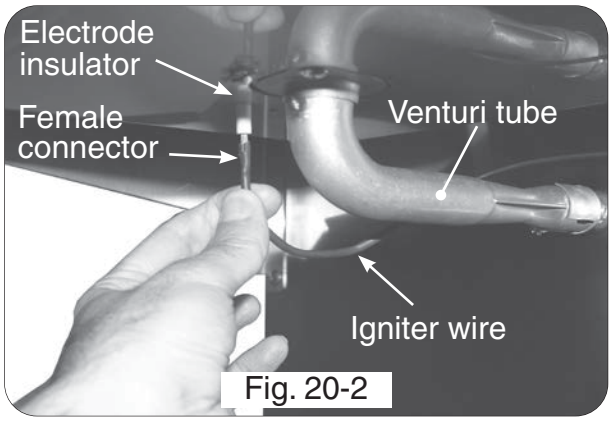

Connecting the igniter wires

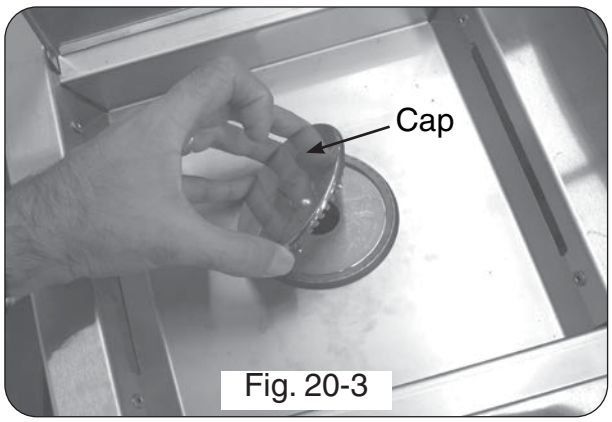

Placing the burner cap

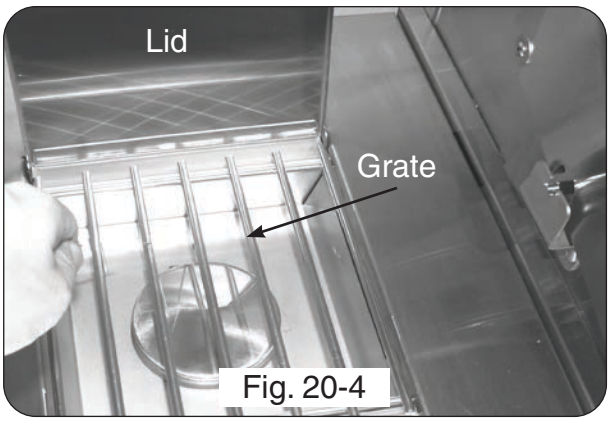

Final look

This shelf comes separate from the grill for convenience in shipping. The sideburner shelf must be installed using the following instructions before hooking up the grill to a gas source.

INSTALL THE SIDEBURNER SHELF

1. Remove the protective plastic from the grill, sideburner, and sideburner lids by carefully peeling it off with your fingers. Do not use tools.
2. Hold the sideburner shelf up against the left side wall of the grill so that the holes in the shelf line up with the four (4) threaded screw holes in the side wall and the air-shutter end of the sideburner venturi tube fits around the brass orifice protruding from the side of the cart.

WARNING: It is critical for safety and for the proper function of the sideburner that the sideburner venturi tube with air shutter be centered around and completely cover the gas orifice.

3. Insert and start screws with fingers and then tighten using a Phillips screwdriver.

Important: Take caution to **not cross-thread** when tightening the screws.

Note: Upon completion, the air shutter must still fit around the brass orifice.

4. Connect the female connector on the end of the igniter wire to the male igniter connector protruding from the bottom of the white insulator.
5. Place the burner cap on top of the burner, as shown in Fig. 20-3.
6. Place the grid so that it rests on the front and back lips of the sideburner opening (Fig. 20-4).
7. Proceed to the section on AIR SHUTTER ADJUSTMENT and complete the installation by adjusting the air shutter. This will also test the sideburner installation.

RIGID SHELF INSTALLATION

This barbecue comes with one rigid shelf that must be attached. It can be attached using the four support screws provided and a Phillips-head screwdriver.

Important: Take caution to **not cross-thread** when tightening the screws.

1. Insert the top two screws into the side of the barbecue and screw them in about half way.
2. Line up the larger, bottom portion of the two keyhole openings with the two top screws and fit the two keyhole openings over the two screws. With the shelf pushed all the way against the side of the barbecue, lower the shelf so that the screws lock into the narrower, upper portions of the keyholes.

Note: The shelf will now stay in place on it's own.

3. Insert the bottom two screws into their holes and tighten them all the way.
4. Finally, tighten the upper two screws, completely.

To detach, reverse the process above.

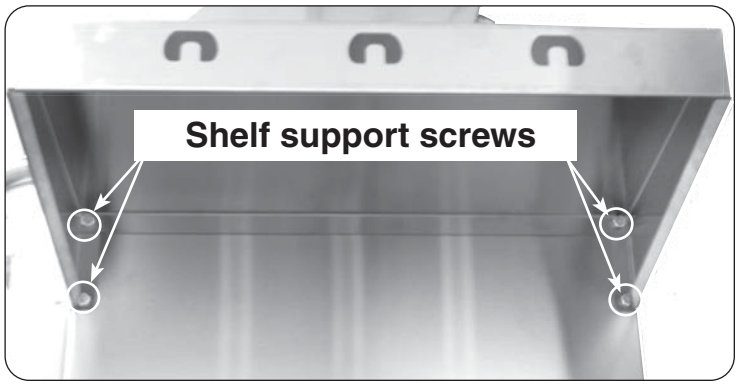

View from under right shelf

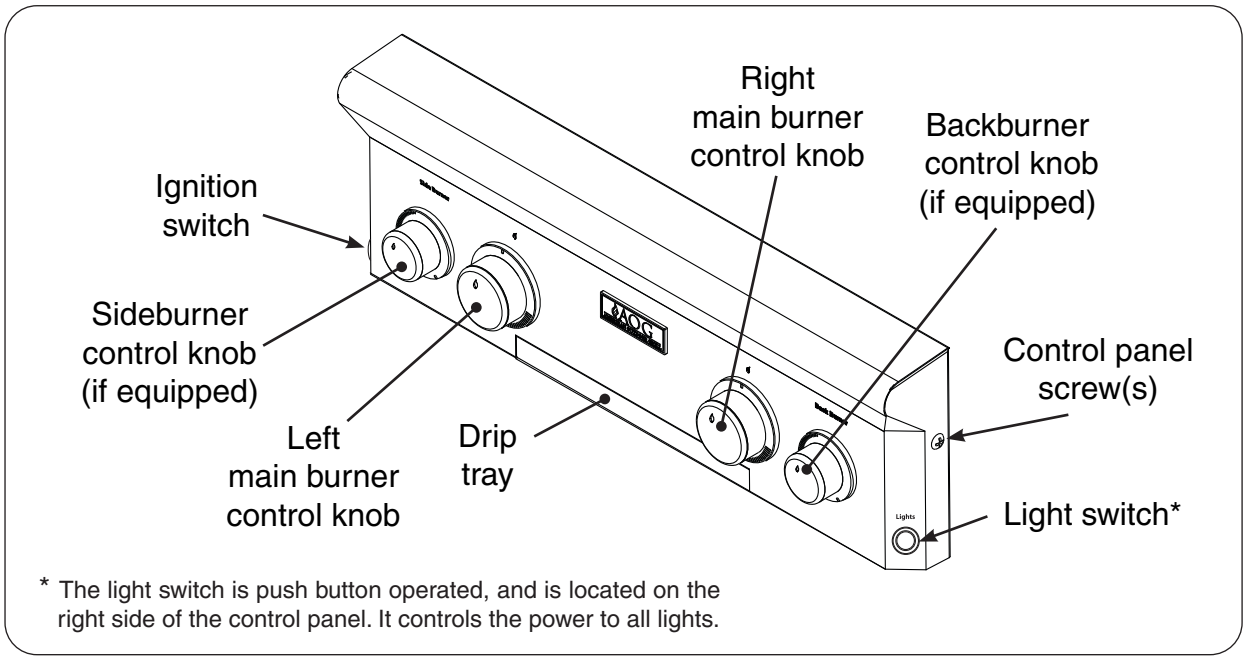

Fig. 22-1 24" model controls

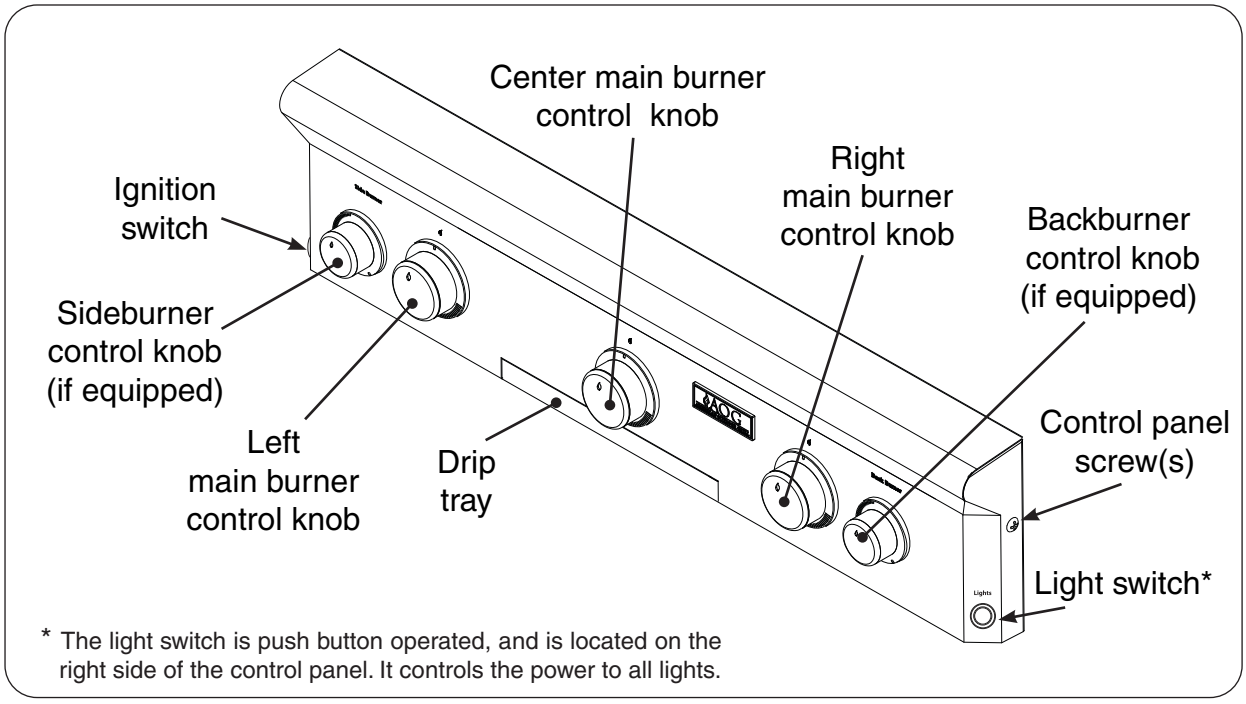

Fig. 22-2 30" and 36" model controls

USING THE GRILL

BEFORE INITIAL USE

Ensure that:

- the unit has been properly installed and leak tested by a qualified professional service technician and as instructed in this manual.
- you have read and understand all of the information in this manual.

BEFORE EACH USE

Ensure that:

- you smell around the appliance area for gas. If you smell gas (and all control knobs are in the **OFF** position), immediately shut off the gas supply and contact a qualified professional service technician or the gas supplier for inspection.
- the vent openings and surrounding area of the unit are clear and free at all times.
- the cooking area and drip tray are clean, and the drip tray is properly installed.
- you inspect all piping and hoses for damage, cuts, wear, and tear. Replace any damaged components prior to use.

OPERATION

- **The unit becomes HOT during use. NEVER touch any part of the cooking area or surrounding hot surfaces with bare hands. Use long-handled insulated BBQ tools and wear an insulated glove / oven mitt.**
- **Always keep your face and body as far from the unit as possible during use. Avoid wearing loose-fitting clothing as they could ignite.**
- **This appliance is designed as an attended appliance. DO NOT leave this appliance burning when unattended.**
- **NEVER cover more than 75% of the cooking surface with griddles or pans to prevent overheating.**
- **After each use, turn the control knob(s) to the OFF position and turn off the gas supply to the unit.**

After reading and understanding all bullets above, follow these steps to light and use your grill:

1. Light the grill per the LIGHTING INSTRUCTIONS section.
2. Turn the control knobs to the HI-LIGHT position, close the hood, and allow the grill to preheat for 15 minutes or until desired cooking temperature is reached.
3. Place the food on the grill and cook as desired. Monitor the flames and the temperature, and adjust the heat setting if necessary.
4. See the sections below and the following pages for all other information regarding use.

WIND CONSIDERATIONS

Proper airflow (front-to-back, Fig. 23-1) MUST be maintained for the unit to perform as it was designed. See the INSTALLATION REQUIREMENTS section for details.

When using the unit in windy conditions, the wind can disrupt the airflow and cause overheating. To prevent overheating during windy conditions, do not leave the hood closed with the burners on high for more than 15 minutes.

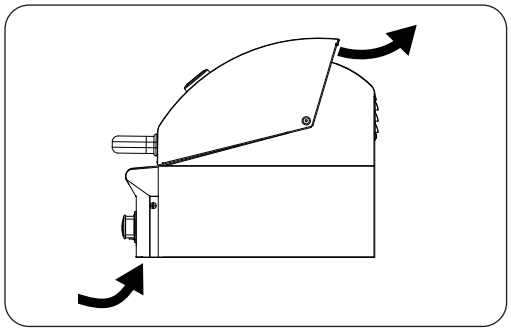

Fig. 23-1 Airflow diagram

AFTER EACH USE

1. Operate on high with hood closed for 10-15 minutes to burn off all grease.
2. Turn off the grill and brush the cooking grids to remove all residue.

CAUTION: Use long-handled insulated BBQ tools and wear an insulated glove / oven mitt.

3. When the grill is cool, check and clean the drip tray. Then cover the grill.

Note: For additional cleaning information, refer to the SERVICING AND CLEANING section.

ALLUMAGE DES INSTRUCTIONS (D'ALLUMAGE)

Lisez toutes les instructions avant l'allumage, et suivez ces instructions chaque fois vous lumière le unité.

ÉCLAIRAGE ÉLECTRONIQUE

Note: Le unité doit être relié à la puissance 120VAC pour l'éclairage électronique.

1. Ouvrez les couvercles ou enlevez les couvertures des brûleurs pour être Lit.
2. Tournez tous les boutons de commande de gaz à leurs positions de repos.
3. Allumez le gaz à sa source.

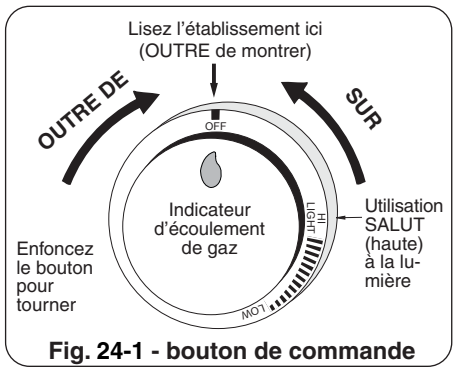

Fig. 24-1 - bouton de commande

Note: N'ouvrez pas plus d'une valve à la fois pour l'éclairage électronique ou manuel.

4. Appuyez sur le commutateur d'allumage et maintenez-le enfoncé. Assurez-vous que l'allumeur produit des étincelles (vous entendrez un «clic»), puis appuyez sur le bouton de commande souhaité et, tout en appuyant sur, tournez-le dans le sens antihoraire jusqu'à la position **HI LIGHT**. Une fois le brûleur allumé, relâchez le bouton de commande et le commutateur d'allumage.

ATTENTION : Si un brûleur ne s'allume pas dans cinq (5) secondes d'allumer le bouton de commande, enfoncez le bouton et tournez-le à la position de repos. ATTENDEZ CINQ (5) MINUTES avant de répéter l'étape 4. Si vous sentez le gaz, suivez les instructions sur la couverture de ce manuel. Si les brûleurs ne s'allument toujours pas après que plusieurs tentatives, se rapportent aux instructions pour l'éclairage manuel.

5. Répétez l'étape 4 pour que chaque brûleur additionnel soit Lit.

EN EMPLOYANT UN RÉSERVOIR DE PROPANE PORTATIF

Des réservoirs de propane sont équipés d'un dispositif d'arrêt de sûreté qui peut ne pas causer le bas ou aucunes pression de gaz/flamme aux brûleurs si le fonctionnement et l'allumage des instructions ne sont pas suivis exactement (voir la note importante dans la section de dépannage pour plus de détails.)

ÉCLAIRAGE MANUEL

ATTENTION: Attendez toujours cinq (5) minutes le gaz pour se dégager après que n'importe quelle tentative non réussie d'éclairage.

1. Suivez les étapes 1 à 3 (à gauche).
2. Insérez soit un brûlant long baril briquet au butane, un match à longue tige de brûlure, ou une allumette en feu détenues par un titulaire d'extension de fil (Fig. 24-2) À travers les grilles de cuisson du brûleur (Fig. 24-3). Pour backburners, maintenez la flamme contre le matériau perforé de la veilleuse. Pour sideburners, maintenez la flamme contre le brûleur.
3. Tout en maintenant le match ou flamme d'un briquet à proximité du brûleur, appuyez sur le bouton de contrôle approprié et en appuyant son tour dans le sens antihoraire à la position **LIGHT HI**. Enlevez l'allumeur ou assortissez quand le brûleur s'allume, et libérez le bouton de commande.
4. Si le brûleur ne se allume pas dans les cinq (5) secondes de tourner le bouton de commande, enfoncez immédiatement le bouton et tournez la valve à AU LOIN. ATTENDEZ CINQ (5) MINUTES avant de répéter les étapes 2 à 4 des instructions manuelles d'éclairage.

Fig. 24-2 - Titulaire de match

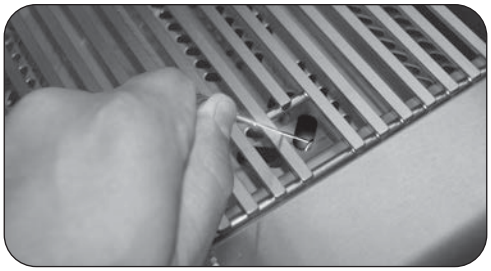

Fig. 24-3 **- Éclairage manuel**

ARRÊT DU UNITÉ

Pour couper le unité, diminuez chaque bouton de commande de valve et tout en pressant tour il dans le sens des aiguilles d'une montre à la position de repos.

Fermez toujours la valve de la fourniture de gaz après chaque utilisation du unité.

Pour votre convenance et sûreté ; quand le bouton de commande est tourné a la position de fonctionnement, l'indicateur d'écoulement de gaz changera de bleu en le rouge. (Le rouge indique l'écoulement de gaz.) Voir la Fig. 24-1.

LIGHTING (IGNITION) INSTRUCTIONS

Read all instructions before lighting, and follow these instructions each time you light the unit.

ELECTRONIC LIGHTING

Note: This unit must be connected to 120VAC power for electronic lighting.

1. Open lid(s) or remove cover(s) from burner(s) to be lit.
2. Turn all gas control knob(s) to their **OFF** position(s).
3. Turn on the gas at its source.

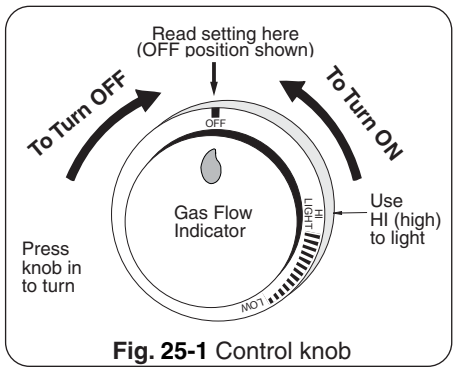

Fig. 25-1 Control knob

Note: DO NOT turn on more than one valve at a time for either electronic or manual lighting.

4. Press and hold the igniter switch. Ensure the igniter is sparking (it will create a "clicking" sound), then, depress the desired control knob, and while pressing turn it counterclockwise to the **HI LIGHT** position. Once the burner lights, release the control knob and igniter switch.

CAUTION: If a burner does not light within five (5) *seconds* of turning on the control knob, depress the knob and turn it to the **OFF** position. WAIT FIVE (5) *MINUTES* before repeating step 4. If you smell gas, follow the instructions on the cover of this manual. If the burners still do not light after several attempts, refer to the instructions for manual lighting.

5. Repeat step 4 for each additional burner to be lit.

WHEN USING A PORTABLE PROPANE TANK

Propane tanks are equipped with a safety shutdown device that may cause low or no gas pressure/flame at the burners if operating and lighting instructions are not followed exactly (See important note in the TROUBLESHOOTING section for more details.)

MANUAL LIGHTING

CAUTION: Always wait five (5) minutes for gas to clear after any unsuccessful lighting attempt.

1. Follow steps 1 through 3 (left).
2. Insert either a burning long-barrel butane lighter, a burning long-stem match, or a burning match held by a wire extension holder (Fig. 25-2) through the cooking grids to the burner (Fig. 25-3). For backburners, hold the flame against the perforated material of the backburner. For sideburners, hold the flame against the burner.
3. While holding the match or lighter flame next to the burner, depress the appropriate control knob and while pressing turn it counterclockwise to the **HI LIGHT** position. Remove the lighter or match when the burner lights, and release the control knob.
4. If the burner does not light within five (5) seconds of turning the control knob, **immediately depress the knob and turn the valve to OFF**. WAIT FIVE (5) MINUTES before repeating steps 2 through 4 of the MANUAL LIGHTING instructions.

Fig. 25-2 - Match holder

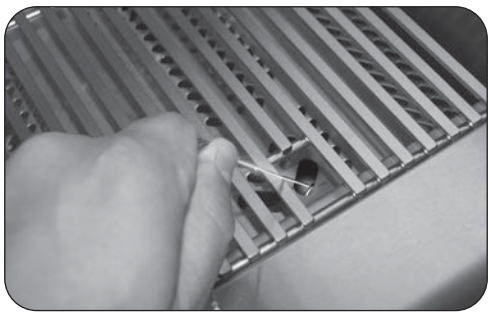

Fig. 25-3 **- Manual lighting**

SHUTTING OFF THE UNIT

To shut off the unit, depress each valve control knob and while pressing turn it clockwise to the **OFF** position.

Always close the valve from the gas supply after each use of the unit.

For your convenience and safety; when the control knob is turned to the on position, the gas flow indicator will change from blue to red. (Red indicates gas flow.) See Fig. 25-1.

OPTIONAL INFRARED BURNER OPERATION

The infrared searing burner (optional) cooks with a powerful radiant heat.

Note: ONLY ONE INFRARED BURNER IS PERMITTED FOR USE ON AOG GRILLS.

Light the infrared burner following the LIGHTING INSTRUCTIONS found this manual or printed on the grill's drip tray. When lighting manually, use the wire extension match holder included with this kit to safely hold a lit match. Follow these guidelines when operating the Infrared burner:

- **DO NOT place food on the cooking grid until the infrared burner glows orange (Fig. 26-3).** Drippings are heated and evaporate instead of sticking to and impairing burner function.
- **Always leave your burner on (after cooking) for an additional 5 minutes, to allow for a burnoff period. This is important to keep your burner clean and operating properly.**
- Refer to the CARE, CLEANING, & MAINTENANCE GUIDE provided with your grill for details on deep cleaning.
- When not in use, **always** cover the infrared burner with the stainless-steel cover. This protects the burner from drippings (from other cooking), water, airborne particles, and foreign objects (Fig. 26-2).

Important: Clean burners allow the gas to circulate and burn over the entire heating surface for powerful and even cooking.

- Do not strike or scrape the ceramic portion of the burner as it may chip, crack, or break (Fig. 26-2).

Important: When grilling with the infrared burner, always place a cooking grid above it. The cooking grid must be removed for rotisserie cooking.

CAUTION: Never attempt to operate the infrared burner with the protective cover in place.

WARNING

Only handle the infrared burner cover when the unit is cold or with a well-insulated long-handled tool or heat resistant gloves.

Drips and particles evaporate before hitting infrared burner when cooking at the maximum setting.

Note: Vaporizer panels are not to be used with infrared burners.

To ensure proper operation, all infrared burners (back and main) must be operated on the HI setting for a minimum of 10 minutes. Thereafter, the flame may be lowered as desired.

CAUTION: Always monitor the infrared burner flame when operated on low, as it may blow out in high-wind conditions.

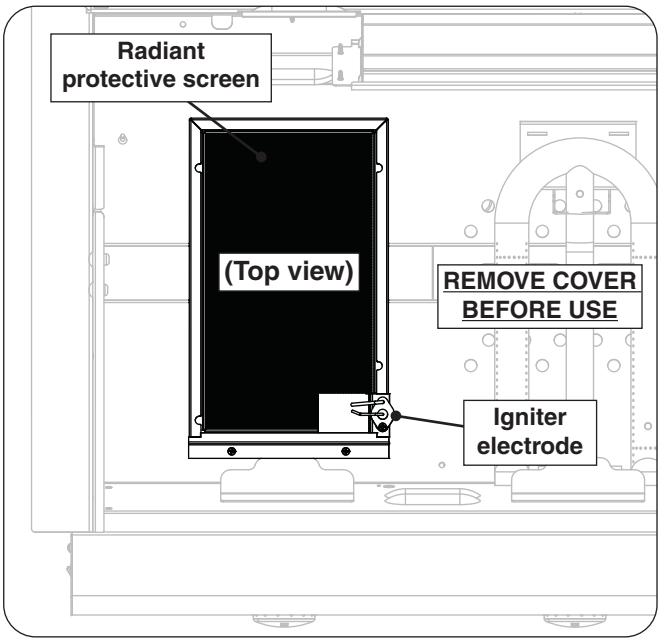

Fig. 26-1 Infrared burner overview

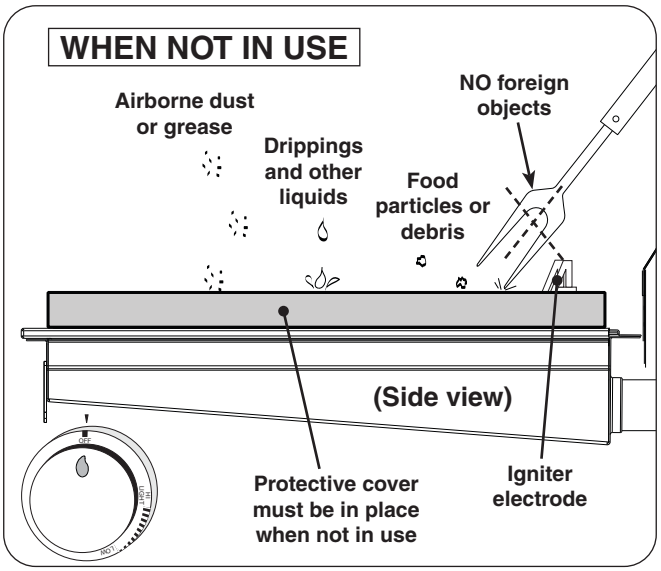

Fig. 26-2 Infrared burner - WHEN NOT IN USE

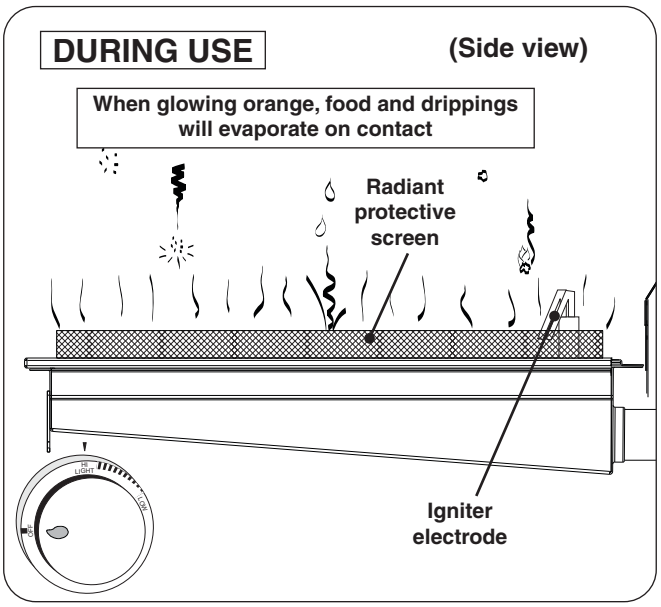

Fig. 26-3 Infrared burner - DURING USE

ROTISSERIE INSTRUCTIONS (IF EQUIPPED)

CAUTION: WHEN USING THE BACKBURNER; KEEP THE OVEN LID CLOSED TO PREVENT HEAT LOSS, PROVIDE PROPER CONVECTION, AND PROVIDE PROPER VENTING. THIS WILL ENSURE EVEN COOKING TEMPERATURES.

DO NOT KEEP YOUR OVEN LID OPEN DURING ROTISSING, AS THIS MAY CAUSE PERSONAL INJURY, OR IN SOME CASES, IN WINDY CONDITIONS, DAMAGE TO THE GRILL.

DO NOT USE THE ROTISSERIE MOTOR IN THE RAIN. DO NOT LEAVE THE MOTOR ON THE GRILL WHEN NOT IN USE.

1. Remove the warming rack and cooking grids from the barbecue. The vaporizer panels may also be removed if required.

Tip: Aluminum foil or a baking pan is recommended and may be placed over the main burners / vaporizer panels, a little forward of center, to catch excess drippings from the meat.

2. Attach the rotisserie motor to the rotisserie mounting on the right side of your barbecue by sliding the bracket attached to the motor onto the tab on the right of the barbecue. The motor should be installed so that the spit rod will fit into the motor drive socket from the left.

3. Slide the left spit prong onto the rod (and tighten), the meat onto the rod and into the prong, followed by the right spit prong onto the rod and into the meat. Tighten the right spit prong. Be sure the meat is centered and balanced as well as possible.

4. Insert the pointed end of the rod into the motor drive socket and the groove next to the handle into the left support bracket.

5. Plug in (if necessary) and turn on the rotisserie motor.

6. Light backburner per lighting instructions in this manual (or on drip tray handle) and close oven lid.

7. Allow the backburner to preheat for approximately 10 minutes on **HI LIGHT** setting.

Note: When burning properly, the backburner grating will glow red. The first time it is used the backburner may smoke a little.

Important: Turn the backburner to low or off when stopping the rotisserie to prevent overcooking.

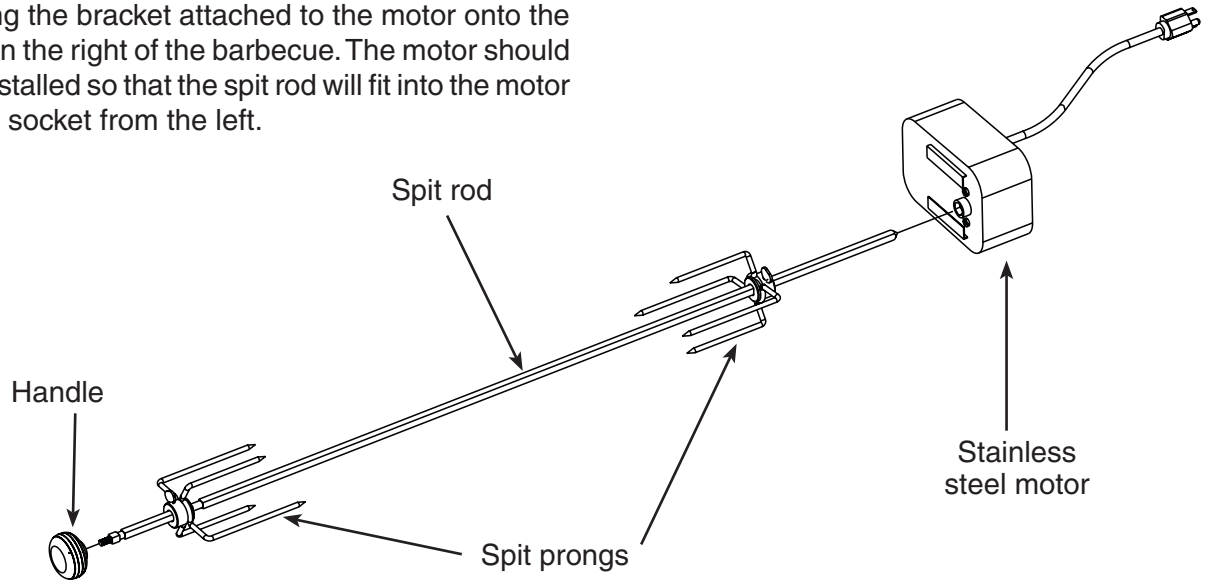

SERVICING AND CLEANING

Your grill requires regular cleaning and maintenance. Refer to these instructions for details. Performing these procedures will ensure proper operation, appearance, and safety.

WARNINGS

- Prior to servicing or cleaning make sure the unit is completely cool, the control knobs are turned to the OFF position, the gas supply is shut off, the light switch is off, and the power supply is disconnected (as applicable and unless otherwise stated).
- Wear appropriate gloves and safety glasses during any servicing or cleaning.
- DO NOT spray any cleaner or liquids on the grill when hot.
- The grill MUST be cleaned regularly to prevent grease build-up and other food deposits. A clean and well maintained grill prevents the risk of grease build-up and grease fires.
- Verify proper operation after servicing or deep cleaning.
- See INSTALLATION, OPERATION, AND SAFETY INFORMATION section for additional related information.

CLEANING YOUR GRILL

Before Each Use

1. **Inspect and clean the exterior surfaces of the unit:** With a cool grill, clean any dust, grease, splatter, or spills as needed with a damp clean cloth.

After Each Use

1. **Perform a burn-off and clean the cooking grids:** Operate the grill on high with the hood closed for 15 minutes to burn-off food and grease and allow for an easier cooking grid clean. Then turn OFF the grill and use a grill brush to clean the cooking grids of all residue. Use long-handled insulated BBQ tools and wear an insulated glove / oven mitt.
2. **Check and clean your drip tray:** When the grill is cool, carefully remove the drip tray and dispose of contents appropriately. Clean tray in a soapy water solution if needed. For tough deposits, a copper pad can be used. Rinse and dry completely.
3. **Cover your grill:** Once the grill is dry and cool, cover your grill with an AOG protective cover (not included).

Twice A Year (or as needed) - Deep Clean

1. **Interior of grill:** In addition to cleaning the cooking grids and drip tray, a deep clean of the interior of the grill, burners, and all components MUST be performed twice year (or as needed depending on use). Refer to the CARE, CLEANING, & MAINTENANCE GUIDE provided with your grill, or simply scan the QR code on the right.

Important: The burner ports and carry-over ports/slots MUST be kept clean to ensure proper ignition and operation. The guide provides all details on cleaning.

2. **Exterior of grill:** With a cool grill, use a grill cleaner (or a soapy water solution) and a clean cloth to remove grease and dirt from the outside of the grill. For tough deposits, a copper pad can be used. Always wipe with the grain. Rinse and dry completely. Then follow up with a stainless steel cleaner and a clean cloth. DO NOT use other cleaners or chemicals.

   If this routine cleaning is not performed, the stainless steel may become dull and develop surface rust (due to use and atmospheric conditions). If left uncleaned, significant damage and pitting may occur.

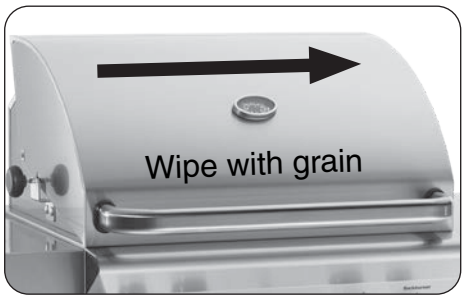

Fig. 28-1 Wipe with grain

Important: DO NOT use steel wool, any other metal tools, or any other cleaners/chemicals to clean the exterior other than recommended above. Such items promote rust.

Note: Due to the nature of stainless steel, temperatures produced by the grilling process will cause discoloration. This can be reduced by routine cleaning.

For Environments High In Salt, Chloride, Or Other Corrosive Chemicals

When this grill is installed in a corrosive environment such as near the ocean (salt air), poolside (chlorine and/or pool chemicals) or any other location with exposure to high salt/chloride content or corrosive chemicals/solutions, it will be more susceptible to corrosion and MUST be maintained/cleaned more frequently.

- DO NOT store any corrosive chemicals (chlorine, hydrochloric acid, fertilizer, etc.) near your stainless steel grill.
- DO NOT allow any corrosive materials (masonry dust, debris, etc.) to settle on your stainless steel grill.
- These environments, chemicals, and materials may cause the 304 stainless steel to develop surface rust and consequently pitting. Under these conditions the grill exterior MUST be cleaned at least monthly. Inspect your grill often and clean accordingly.

Protecting Your Grill

An optional AOG protective cover will protect your grill when not in use. Install the cover on a cool and dry grill. DO NOT cover a damp grill. During high humidity or after rainy conditions, remove the cover to dry trapped moisture if present. (If the cover is installed over a damp grill it can cause surface rust.)

Ensure that the INSIDE of the cover is DRY before putting it back on the grill.

REPLACING HALOGEN BULBS

Your grill is engineered with the conveniences of electrical power for illuminating and igniting the grill.

To replace any interior oven light, follow the instructions below.

Important: ONLY REPLACE WITH 12V / 10 WATT HALOGEN BULB(S).

WARNING

To protect from potentially sharp sheet metal and glass, wear gloves and safety glasses during this procedure.

1. Turn all burner control knobs to the **OFF** position and shut off the gas supply to the grill at the source (tank valve for propane units or gas line shut-off valve for natural gas units.)
2. Disconnect supply of external electrical power to the grill.

CAUTION: Wait for the grill, oven, lens, light bulb, and fixture to cool before proceeding to the next step.

3. Open the oven lid.

Important: Place one hand directly below the glass lens and prepare to catch it when it is detached.

4. Carefully insert a standard flat head screwdriver or thin plastic spatula between the glass lens and the stainless steel on which the light is mounted and gently pry the glass lens out in such a way that the stainless steel is not scratched (twisting the screwdriver handle, for instance). Catch the lens and set it safely aside.

Note: You may wish to take this opportunity to clean the lens with a standard household window cleaner and then dry it completely.

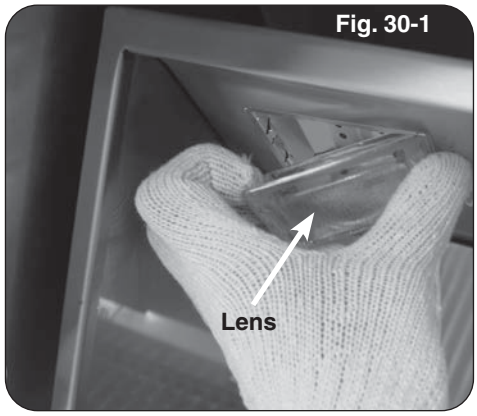

Fig. 30-1

5. Wearing a pair of gloves, reach into the fixture, gently grab the bulb, and pull it straight out of the fixture so that the two pins at the base of the bulb come all the way out.

Important: Bulb is halogen. DO NOT TOUCH with bare hands. Oils from hands drastically reduce bulb life.

Note: It may be helpful to rock the bulb gently backward and forward while pulling it out.

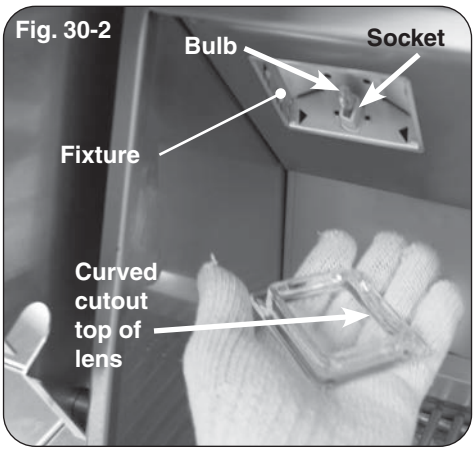

Fig. 30-2

6. Inspect the old bulb for broken glass or filament.

Note: It may be beneficial to test a suspect bulb in one of the other light fixtures known to be working and turn the power back on to be certain the bulb is actually not working.

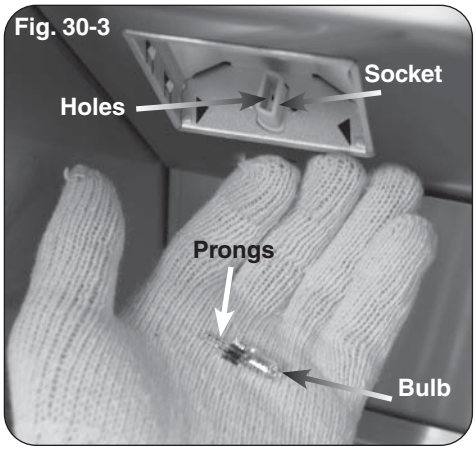

Fig. 30-3

7. Insert the new **12V / 10 watt** halogen bulb into the socket so that both pins slide all the way into the two holes in the bottom of the socket.
8. Place the lens back into the fixture opening with the curved cutout on the bottom and snap it back into place.

CONTROL PANEL REMOVAL

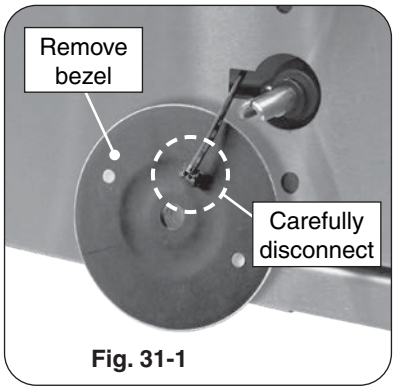

Fig. 31-1

1. Turn the control knobs to the OFF position and turn off the gas supply to the grill.

2. Turn off the light switch and disconnect the unit from the power source.

3. Pull the control knobs from their stems and set them aside.

4. Using a Phillips screwdriver, unscrew the control panel fastener screws (located on the sides of the control panel). Retain the screws for later re-installation.

5. Carefully open the control panel by lifting and pulling the control panel from the frame.

Important: When opening, take caution to not damage any wiring. The drip tray can be opened slightly to support the control panel.

To completely remove the control panel:

1. Follow steps 1-5 above.

2. Disconnect the main wire harness connections (**A**), the left light connection (**B**), the right light connection (**C**), and the igniter wires (**D**). It is recommended to temporarily label the wires for reference when reconnecting. See Fig. 31-1. When disconnecting, be sure to pull from the connectors, and not the wires.

Note: Secure any disconnected wires (coming from the inside of the grill) to prevent them from falling into the unit.

3. Carefully remove the control panel.

Note: Whenever reconnecting <u>any wires</u>, apply a small amount of dielectric grease to the <u>male</u> connector, then make the connection. This will ensure conductivity and prevent moisture from affecting the contact.

Important: During reinstallation; prior to opening the gas shut-off valve, be sure the control knob(s) are in the OFF position.

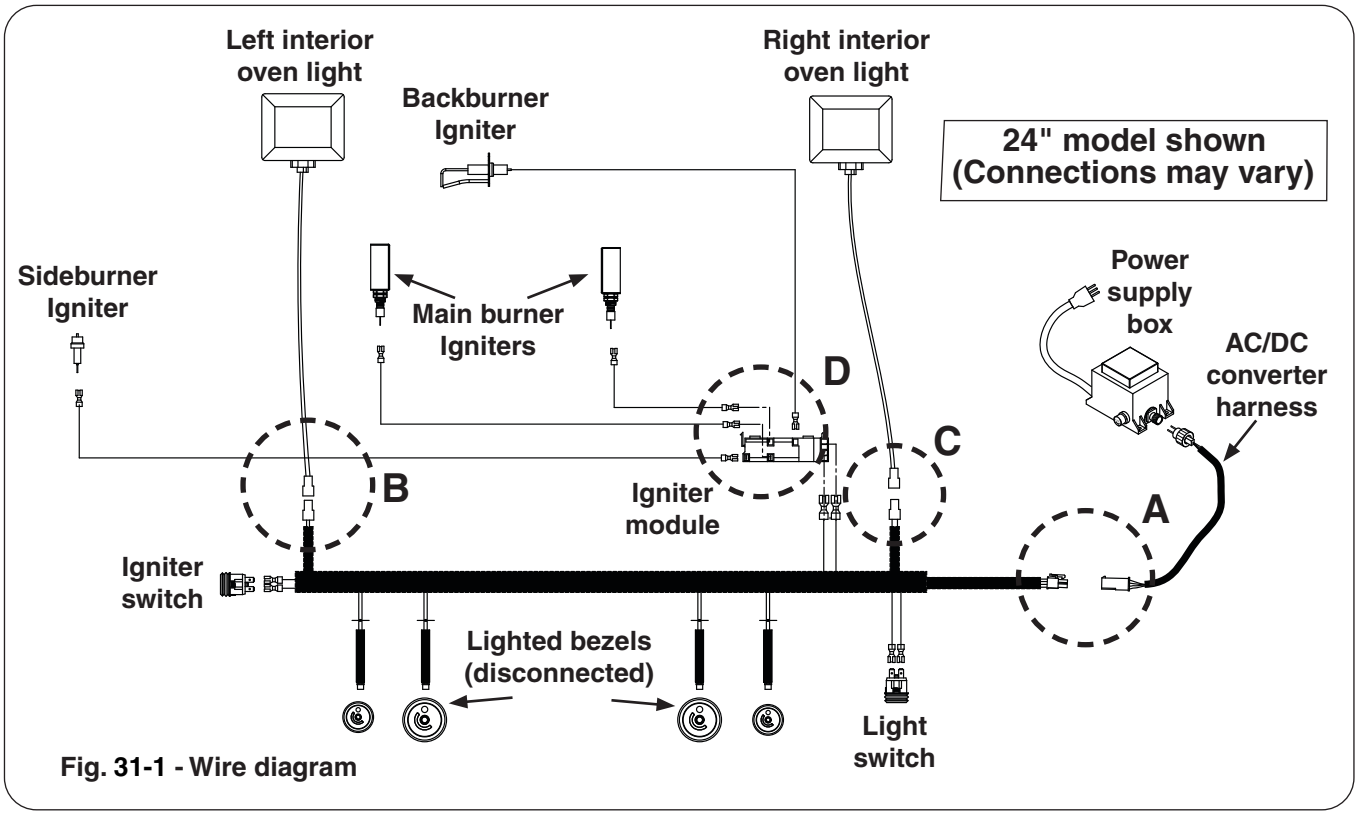

Fig. 31-1 - Wire diagram

FUSE REPLACEMENT

If the unit is connected to the power supply but the ignition system and interior oven lights are not functioning, fuse replacement may be required.

1. **Ensure the knobs are in the OFF position, the gas supply is turned off, and the light switch is off.**
2. Disconnect the power supply cord from line power.
3. Locate the fuse holder on the power supply box (see Fig. 32-1).
4. Turn the fuse cap counterclockwise to remove the cap and access the fuse.
5. Replace with a new fuse (model # 24-B-57).
6. Re-secure the fuse cap.
7. Reset the GFCI receptacle if needed, then test the unit.

Note: If the unit powers up but some or all components are not responding, reference the TROUBLESHOOTING section.

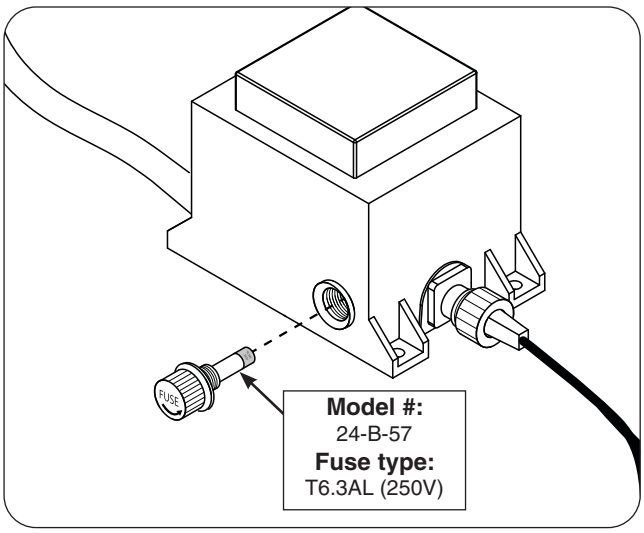

Fig. 32-1 Replace fuse

MAIN BURNER REMOVAL

1. Remove the cooking grid and vaporizer panel from above the burner that is to be removed and set them aside.
2. Locate the burner clip (located over the rear center tube of the burner) and slightly pinch and remove the clip from the burner support. See Fig. 32-2.
3. Carefully lift the burner from the burner support anchor peg holes and out from the hole in the forward fire wall.
4. To replace the burner, slide the open cylindrical end of the burner around the orifice, enveloping it and centering on it. Then lower the back end anchor pegs into the burner support anchor peg holes.

Note: It is critical to the continued safe functioning of the burners that the orifices are centered and completely inside the burner gas inlets.

5. Re-install the burner clip around the burner and into the holes in the burner support.
6. Replace the cooking grid and vaporizer panel.

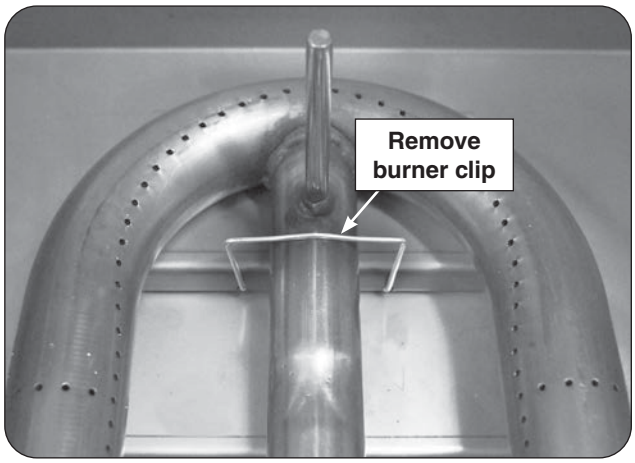

Fig. 32-2 Main burner removal

CONVERT GAS TYPE / CHECK BURNER ORIFICES

CAUTION: Make sure the grill is at a safe temperature and isolated from gas and electrical supplies before beginning.

For your safety, exercise caution, and make sure you have adequate hand protection, such as gloves, when handling metal parts.

A kit is available from the manufacturer to convert your appliance from L.P. gas to natural gas. Contact your dealer for ordering information.

Follow the instructions included with the conversion kit. This section only provides an overview.

To simply check orifices, refer to the CHECK ORIFICE sections.

Apply Conversion Label

This grill comes from the factory configured for one type of gas as marked on the label inside the cabinet.

When the grill is converted, the label for the new gas MUST be filled out and applied next to the existing label mentioned above.

Convert Regulator

The gas regulator, equipped only on natural gas models and located beneath the grill, must be set for the type of gas used to fuel the grill. To check the regulator setting, remove the cap in the center of the regulator (Fig. 33-1, A). Holding the cap vertical (see Fig. 33-2, B), the letters at the bottom of the plastic stalk indicate the gas type for which the regulator is currently configured.

If the text on the bottom of the regulator stalk does not match the gas type connected to the grill, remove the stalk from the cap, invert, and replace into center of cap. Replace cap on the regulator, screwing down until snug.

Note: Models to be connected to household propane or natural gas lines require the regulator (contact your dealer if a regulator needs to be ordered). For models to be connected to L.P. cylinders, the regulator is optional.

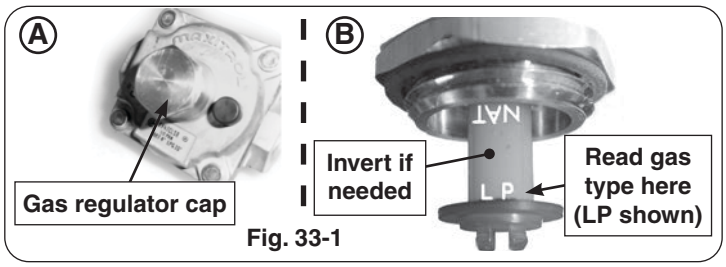

Fig. 33-1

Convert Gas Orifices

When converting the grill to a different gas type, each burner's orifice must be replaced with the corresponding orifice for the new gas (not included).

See MODEL SPECIFICATIONS TABLE, Table 1 to determine the proper orifice sizes for each burner.

See the following sections for details on orifice conversion.

Important: It is critical to the operation of each burner that its orifice be fully inserted into the center of its orifice opening.

WARNING

HAZARDOUS OVERHEATING WILL OCCUR IF A NATURAL-GAS ORIFICE IS USED WITH PROPANE GAS.

Connect To New Gas Supply

Plumb the unit as appropriate for the new gas supply. (Additional components may be needed for your specific setup.) **Be sure to leak test at all connections.**

Natural-gas to propane-gas conversions using a tank internal to a portable grill require installation of a propane tank holder (not included). This tank holder must be purchased separately from the manufacturer.

Convert/Check Main Burner Orifices

Note: It may be necessary to remove the rotisserie rod before beginning this procedure.

1. Remove the cooking grids and vaporizer panels and set them aside.
2. Remove the burners (see BURNER REMOVAL section for step-by-step instructions).
3. Use a $^1/_2$" hex deep socket nut driver to remove the exposed orifices. Access the orifices through the holes in the forward firebox plate inside the grill (see Fig. 33-2, A). Check orifices. If needed, replace all with the correct orifices for the new gas.

   Alternatively, the orifices can be accessed through the inside of the control panel if the proper tool is not available (see Fig. 33-2, B). This allows a $^1/_2$" open-end wrench to be used instead of a $^1/_2$" hex deep socket nut driver. To open the control panel, see the CONTROL PANEL REMOVAL section.

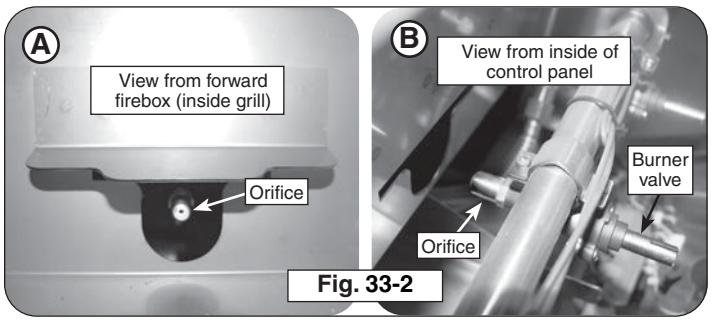

Fig. 33-2

Procedure continued on next page

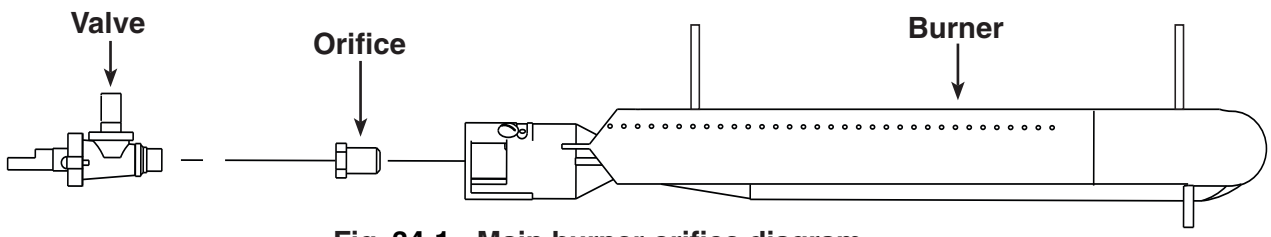

Fig. 34-1 - Main burner orifice diagram

4. Replace burners (See BURNER REMOVAL section).

Note: It is critical to the continued safe functioning of the burners that the orifices are centered and completely inside the burner gas inlets.

5. Replace the vaporizer panels and the cooking grids.
6. If applicable, reinstall the control panel.

Convert/Check Backburner Orifice (if equipped)

Note: It may be necessary to remove the rotisserie rod before beginning this procedure.

1. Remove the backburner electrode mounting screw (1/4" hex) (see Fig. 34-2, A) and loosen the electrode. Carefully pull the electrode assembly slightly from the grill wall to give enough clearance for the backburner to be removed (see Fig. 34-2, B).
2. Remove the backburner mounting screws ($^1/_4$" hex) located at the left end of the backburner assembly (see Fig. 34-3).
3. Carefully pull the left end of the backburner forward until the burner can be moved to the left pulling it free from the orifice located on the right side (see Fig. 34-4).
4. Use a $^3/_8$" hex nut driver to remove the exposed orifice. Check orifice. If needed, replace it with the correct orifice for the new gas.
5. Replace the backburner assembly and the electrode by reversing the procedure in steps **1.** through **3.**

Procedure continued on next page

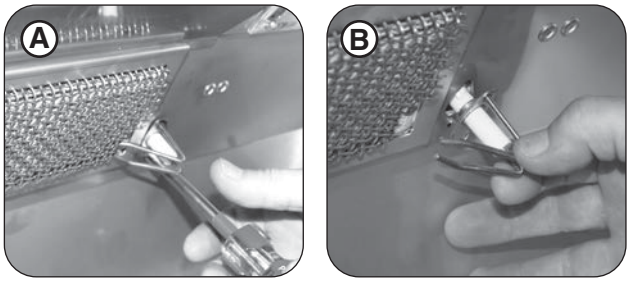

Fig. 34-2 Remove electrode

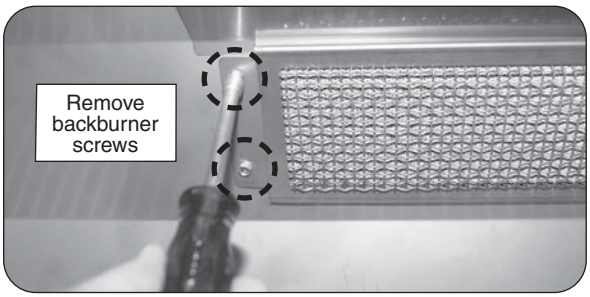

Fig. 34-3 Remove backburner mounting screws

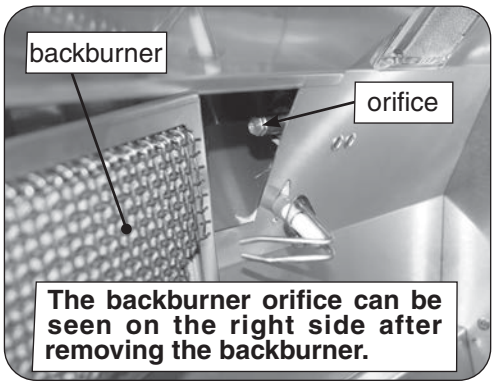

Fig. 34-4 Remove backburner

Convert/Check Infrared Burner Orifice (if equipped)

Note: It may be necessary to remove the rotisserie rod before beginning this procedure.

1. Remove the cooking grid from above the burner you are working on and set it aside.
2. Disconnect the igniter wire from the bottom of the electrode assembly on the infrared burner (see Fig. 35-1).

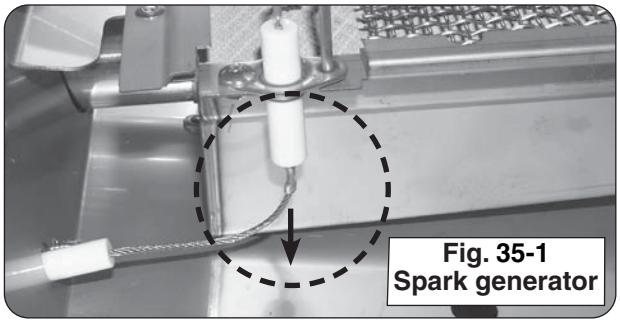

Fig. 35-1
Spark generator

3. Carefully lift the infrared burner from the burner support and out from the hole in the forward fire wall (see Fig. 35-2).

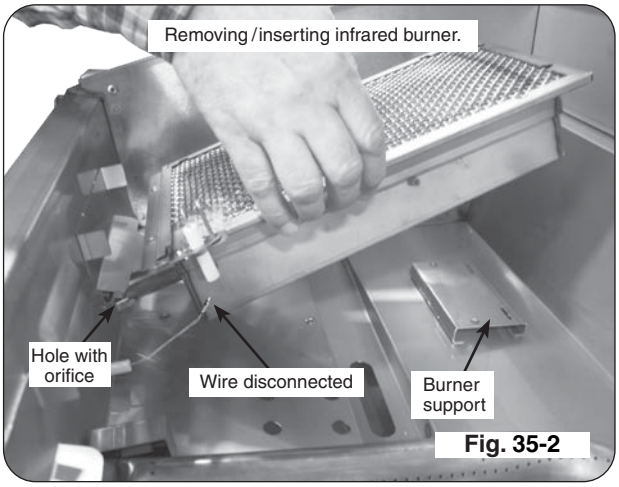

Fig. 35-2

4. Use a $^1/_2$" hex nut driver to remove the exposed orifice. Access it through the hole in the forward firebox plate inside the grill (Fig. 35-2). Check orifice. If needed, replace it with the correct orifice for the new gas.

   Alternatively, the orifice can be accessed through the inside of the control panel if the proper tool is not available. This allows a $^1/_2$" open-end wrench to be used instead of a $^1/_2$" deep socket nut driver. To open the control panel, see the CONTROL PANEL REMOVAL section.

5. Replace the infrared burner over the orifice fitting, sliding it forward, from behind the forward fire wall, so the orifice is centered inside the burner gas inlet, and set it gently onto the burner support. The tabs on the bottom back of the burner must each fit through their respective slots in the burner support.

Note: It is critical to the continued safe functioning of the burner that the orifice is centered and completely inside the burner gas inlet.

6. Reconnect the igniter wire to the bottom of the electrode assembly on the infrared burner.
7. Replace the cooking grid.
8. Repeat for each infrared burner as necessary.
9. If applicable, reinstall the control panel.

Convert/Check Side Burner Orifice (if equipped)

1. Lift the side burner lid. Then remove the grid and side burner cap and set them aside.
2. Locate and remove the cotter pin from the side burner assembly underneath the side burner shelf using needle-nose pliers. Set it aside.

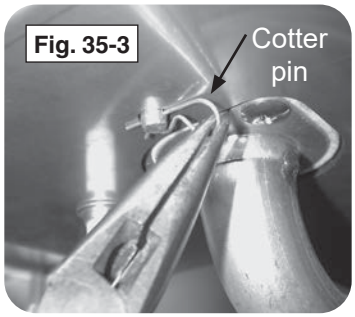

Fig. 35-3

3. From the top of the side burner shelf, lift the side burner upward while rotating the attached tubing underneath away from the orifice near the cart wall. Set it aside.
4. Use a $^3/_8$" hex nut driver to remove the exposed orifice. Check orifice. If needed, replace it with the correct orifice for the new gas.

Note: To protect the manifold threads when placing the new orifice, start the threading manually, and then tighten with the nut driver.

5. Rotate the burner assembly back into place over the orifice and ensure it is firmly seated in the shelf.
6. Reinsert the cotter pin underneath the side burner assembly using needle-nose pliers. It may be necessary to push downward on the burner assembly from above to fully expose the cotter pin hole. Rotate the inserted cotter pin so that it is flush with the underside of the shelf.
7. Replace the burner cap by centering it on the side burner assembly and ensuring it drops in place.
8. Replace the grid with the grating running front to back so that it drops fully down onto the shelf.

AIR SHUTTER ADJUSTMENT / BURNER FLAME INSPECTION

Important: Air shutters are preset at the factory (see Table 1 in MODEL SPECIFICATIONS). However, gas conversion, altitude, or other local conditions may make it necessary to adjust the air shutters.

Note: Infrared and backburner air shutters are not adjustable.

Note: To verify proper settings, the flames of the burners should be visually checked for proper flame appearance and behavior. Light the grill with the burner(s) on HI setting. Allow at least 2 minutes to burn. See below and Fig. 36-1. The flames should:

- be blue and stable with little to no yellow tips
- burn quietly, and appear to touch the burner

If the flames appear unstable, yellow, noisy, or lift away from the burner, locate the appropriate section for your burner type, and follow the steps.

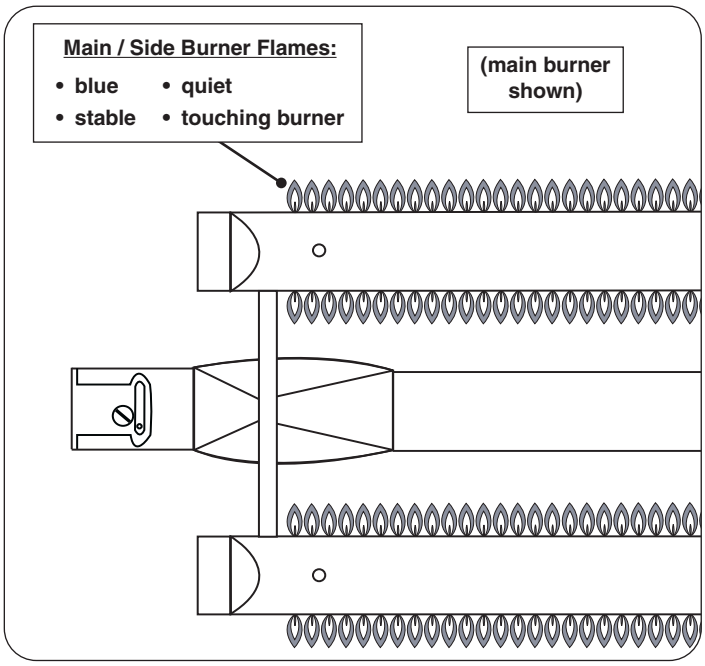

Fig. 36-1 Proper flame appearance

Main Burner

Begin with a completely cool grill. Remove the burners (see BURNER REMOVAL section). First ensure the burner orifice, ports, venturi tubes, and air shutter are all clear of any insect or insect nests. If they are blocked, clean them, reinstall the burners, and reinspect the flames. If adjustment is still needed, **allow the unit to cool**, remove the burner, and proceed to the steps below.

1. To adjust the air shutter, loosen the adjustment screw with a flathead screwdriver. Then rotate the shutter to open or close it. See Fig. 36-2 for details.
   - Begin with the appropriate factory setting for your model (see Table 1 if needed).
   - If the flames were excessively yellow (insufficient air), open the shutter to allow more air to the burner. If the flames were noisy and lifting off the burner in some areas, close the shutter to allow less air to the burner. Adjust accordingly.

Note: Make minimal adjustments. Very small changes result in major changes in flame appearance.

2. Reinstall the burner, light the grill with the burner on HI, and observe the flames. If needed, allow the grill to completely cool, and repeat the adjustment process until the proper flame is achieved.
3. Once finished, allow the grill to completely cool, remove the burner, and tighten the adjustment screw. Reinstall the burner and all other components that were removed.
4. Repeat for all other main burners as needed.

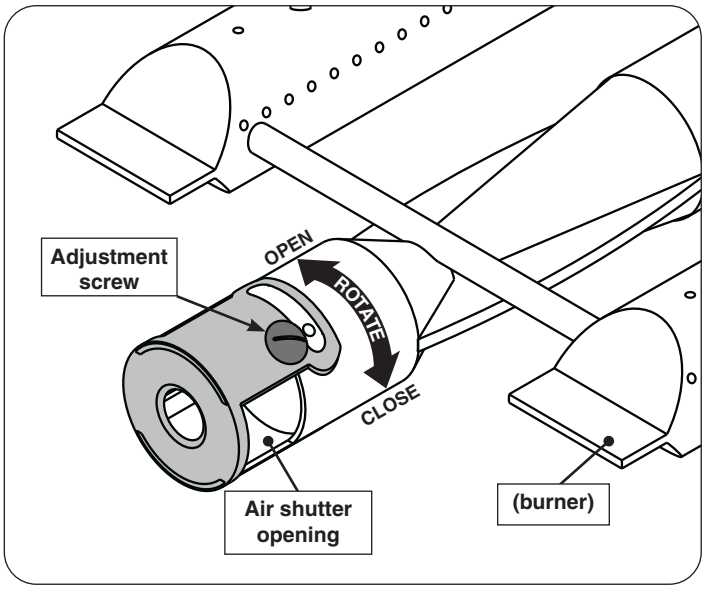

Fig. 36-2 Main burner air shutter adjustment detail

Side Burner (if equipped)

Begin with a completely cool grill. Remove the burner (see CONVERT/CHECK SIDE BURNER ORIFICE in the CONVERT GAS TYPE / CHECK BURNER ORIFICES section). First ensure the burner orifice, ports, venturi tube, and air shutter are all clear of any insect or insect nests. If they are blocked, clean them, reinstall the burner and burner cap, and reinspect the flames. If adjustment is still needed, proceed to the steps below.

Note: The side burner air shutter (located underneath the sideburner shelf on the left side of the unit) can safely and easily be adjusted while the side burner is lit.

CAUTION: Do not touch the side burner or the shelf around it. They will be hot while adjusting the side burner air shutter.

1. To adjust the air shutter, first light the side burner fon HI.
2. Loosen the adjustment screw with a flathead screwdriver, then carefully rotate the shutter to open or close it. See Fig. 37-1 for details.
   - Begin with the appropriate factory setting for your model (see Table 1 if needed).
   - If the flames are excessively yellow (insufficient air), open the shutter to allow more air to the burner. If the flames are noisy and lifting off the burner in some areas, close the shutter to allow less air to the burner. Adjust accordingly.

Note: Make minimal adjustments. Very small changes result in major changes in flame appearance.

3. Once finished, carefully re-tighten the adjustment screw and shut off the side burner.
4. Allow the unit to cool completely, then reinstall the sideburner grid.

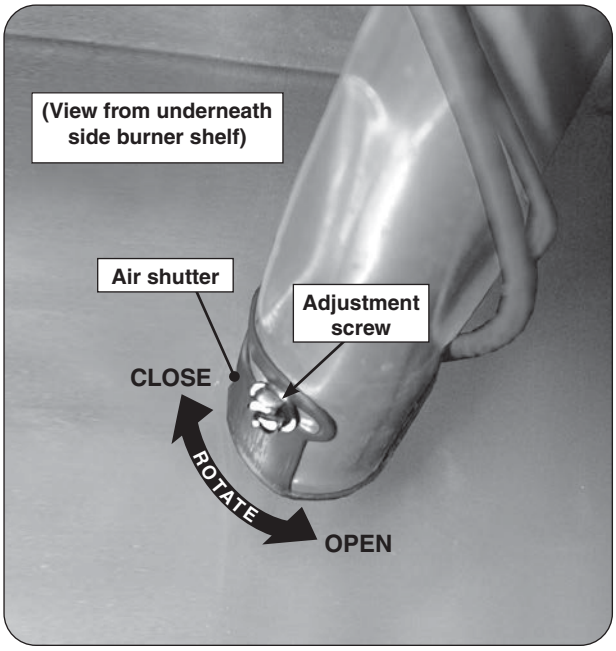

Fig. 37-1 Side burner air shutter adjustment detail

VALVE "LOW" SETTING ADJUSTMENT

Stability of the "low" setting on main burners, infrared burners, and sideburners may vary due to wind direction, grill configuration, and grill position. If your burner goes out when set on low, the valve "low" setting needs adjustment.

Note: Adjustments MUST only be performed by a qualified professional service technician.

Important: **The valve "low" setting for the backburner must remain at the factory setting.** It is recommended to only use the backburner at a medium to high setting.

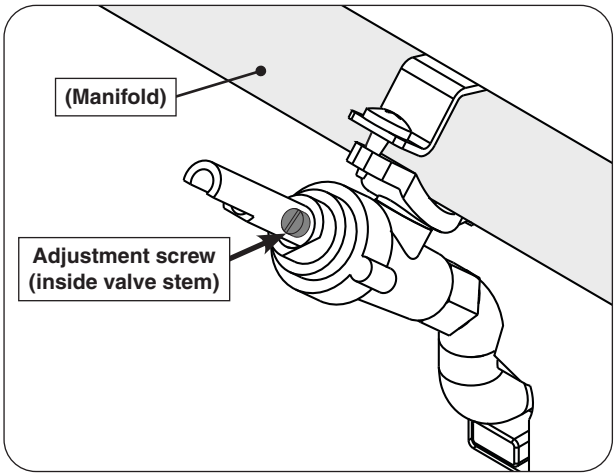

Fig. 38-3 Valve adjustment screw location

To adjust the valve "low" setting:

1. **Ensure the unit is completely cool and the knobs are in the OFF position.**
2. Remove the cooking grids and vaporizer panels.
3. Light the burner on HIGH, then turn the burner to LOW setting. While the burner is lit, remove the control knob from the valve.
4. Locate the FLATHEAD adjustment screw found inside the valve stem (see Fig. 38-1).
5. Using a flathead screwdriver, slowly turn the adjustment screw a little at a time (30° to 45°) in either direction. Adjust the screw as needed until the flame is approximately 1/4" in height from all the burner ports, and the flames are stable.
6. Once the appropriate setting is reached, re-install the control knob and shut off the burner valve.
7. Repeat this procedure for other burner valves, if needed.
8. Reinstall the vaporizer panels, cooking grids, and any other components that were removed.

TROUBLESHOOTING

If you have trouble with the unit, please use this list to identify the problem. By trying one or more of the solutions to the possible cause, you should be able to solve the problem. If this list does not cover your present problem, or if you have other technical difficulties with the unit, please contact your local dealer.

PROBLEM	POSSIBLE CAUSE	CORRECTION
Ignition system failure	1. Power supply failure	1a. Check or replace power supply fuse. See FUSE REPLACEMENT section. 1b. Replace power supply.
	2. Improper air shutter adjustment	2. Adjust air shutters.
	3. Ignition wire disconnected	3. Reconnect wires into igniter module.
	4. Low gas pressure	4. Have the gas co. check supply pressure.
	5. Front carry-over port	5. Clean burner ports.
	6. Igniter switch malfunction	6. Contact dealer for replacement.
	7. Igniter malfunction	7. Contact dealer for replacement.
	8. AC/DC converter malfunction (only if oven lights function but ignition fails)	8. Contact dealer for replacement.
Insufficient heat / low flame	1. Burner ports clogged	1. Remove burners and clean out ports.
	2. Improper air-shutter adjustment	2. Adjust air shutters.
	3. Using propane orifice for natural gas	3. Check/change orifices.
	4. Low gas pressure/flame (propane)	4. Refill propane tank, or reset propane tank safety*: Shut off all valves (including propane tank) and follow lighting instructions exactly.
	5. Low gas pressure/flame (natural)	5. Have a qualified professional service technician check for proper gas supply, setup, and pressure.
	6. L.P. regulator hose cracked due to age	6. Replace L.P. regulator hose.
Uneven heating	1. Burner ports partially blocked by debris	1. Remove burners and clean out ports.
	2. Small spiders or insects in burner	2. Inspect burners and orifices for spider webs or other debris that may block flow.
	3. Improper air shutter adjustment	3. Adjust air shutter.
Rotisserie noisy	1. Rotisserie out of balance	1. Adjust rotisserie counterbalance.
Burner goes out on LOW	1. Valve "Low" setting needs adjustment	1. Light burner on HIGH, immediately turn to LOW setting. Remove knob from valve and using a small flat screwdriver, slowly turn the adjustment screw in the stem, a little at a time (30° to 45°), in either direction, until the flame is approximately 1/4" in height from burner ports.
Interior oven lights and knob lights not operating	1. Light switch not functioning	1. Re-connect external power to grill or contact dealer for replacement.
	2. Interior or knob light(s) burned out	2. Contact dealer for replacement.
	3. Power supply failure	3. See 1a of **Ignition system failure** section above and/or replace power supply.
No power to grill	1. Input power source failure	1. Check GFCI / circuit breaker.
	2. Power supply failure	2. See 1a of **Ignition system failure** section above and/or replace power supply.

Note: *Propane tanks are equipped with a safety shutdown device that may cause low or no gas/flame at the burners if operating and lighting instructions are not followed exactly. **If you suspect the propane tank safety shutoff is in effect:** 1) Shut off all grill valves. 2) Shut off tank valve. 3) Open and close a main burner valve. 4) Open tank valve. 5) Follow the LIGHTING INSTRUCTIONS. Lighting instructions are located in the owner's manual and printed on the unit's metal drip tray. If the problem persists, continue troubleshooting, or contact your local dealer or distributor for assistance.

AMERICAN OUTDOOR GRILL
LIMITED WARRANTY

American Outdoor Grill® warrants your grill to be free from defects in material and workmanship.

American Outdoor Grill stainless-steel burners are warranted for **as long as the original purchaser owns them -- LIFETIME**. All other American Outdoor Grill parts are warranted for **TEN (10) YEARS.** (Except as noted below.)

American Outdoor Grill infrared burners, vaporizer panels, and exterior Glass Fiber Reinforced Concrete (GFRC) grill island systems are warranted for **THREE (3) YEARS**.

American Outdoor Grill ignition systems (excluding batteries) and accessories (including sideburners, motors, and thermometers) are warranted for **ONE (1) YEAR**.

A COPY OF YOUR SALES SLIP FOR PROOF OF PURCHASE IS REQUIRED

This warranty applies to the original purchaser for products which are installed in the United States or Canada and which are operated and maintained as intended for single family residential usage (if the unit is installed in a multi-user setting, a separate Multi-User Limited Warranty applies and is available from RHP). This warranty is valid only with proof of purchase, commences on the date of purchase, and terminates (both as to original and any replacement products) on the anniversary date of the original purchase of the product per the above schedules.

This warranty covers defects in material and workmanship. This warranty **does not** cover parts which become defective as a result of negligence, misuse, use not in compliance with the Installation and Owner's Manual, accidental damage, improper handling, improper storage, improper installation, **lack of required routine maintenance** (as specified in the Installation and Owner's Manual), or electrical damage, local gas impurities or failure to protect against combustible materials. Product must be installed (and gas must be connected) as specified in the Installation and Owner's Manual by a **qualified professional installer**. This warranty **does not** apply to rust, corrosion, oxidation, or discoloration unless the affected part becomes inoperable. RHP products including valves, pilots and controls, are designed and certified to be used as a system. Modifications to products which are not specifically authorized will void this warranty and could render the product to be unsafe. Burners, valves, parts, accessories, remotes, etc. used with this product must be RHP products or this warranty is void.

Warrantied items will be repaired or replaced at RHP's sole discretion. This warranty **does not** cover labor or labor related charges, except as provided by separate specific written programs from RHP. All repair work must be performed by a qualified professional service person and requires prior approval of RHP.

RHP may require the defective product or part to be returned to the factory to determine the cause of failure. RHP will pay freight charges if the product or part is determined to be defective. This warranty does not cover breakage in shipment from our independent distributor to its customer if the damage is determined to have occurred during that shipment.

This warranty specifically excludes liability for **indirect**, **incidental**, or consequential damages. Some states and provinces do not allow the exclusion or limitation of incidental or consequential damages, so the above exclusion may not apply to you. This warranty gives you specified legal rights, and you may have other rights that vary from state to state or province.

For additional information regarding this warranty, or to place a warranty claim, contact the RHP dealer where the product was purchased.

When contacting your RHP dealer or the R.H. Peterson Co., please provide the following information:

- Your name, address, telephone number, e-mail
- Sales receipt showing where purchased and date purchased
- Model number, serial number of product, date code
- Relevant information: installer, additions, repairs, when defect was first noted

TO REGISTER YOUR PRODUCT ONLINE GO TO: WWW.AMERICANOUTDOORGRILL.COM, AND CLICK ON PRODUCT REGISTRATION. THANK YOU FOR YOUR PURCHASE.

Quality Check			**Date:_____**		
Burner Orifices	**Nat.**	**L.P.**	**Leak Test:**	**Model#:**	
Main:	____	____	**Burn Test:**	**Serial#:**	
Back:	____	____	**Gas Type:** Nat. / L.P.	**Air Shutter:**	
Side/Power:	____	____		**Inspector:**	
Infrared:	____	____			
Other:	____	____			